(Translation from Bosnian language)

SET OF INSTRUCTIONS FOR THE DESIGN, SUPPLY, INSTALLATION AND MAINTENANCE OF MOTORWAY ELEMENTS, STRUCTURES OR THEIR PARTS

CONTENTS

According to the article 27 of the Statute of JP Autoceste FBiH d.o.o. Mostar no. 1.1-2866-1/12 as of 29.06.2012. and article 10. Point 3, article 11 of the Rule of Conduct of MB 1.01-2131-8/14 as of 10.04.2014. at the session held on 11.06.2014. Management adopted:

Set of Instructions for design, procurement, installation and maintaining of motorway elements, structures and their parts

Introduction

During the preparation of design drawings, construction and subsequent maintenance, it was found out that some structures, their parts or elements (markings and signs, protective guardrails, safety barriers, lane separators, transitional devices on structures, etc.), on different sections (sub-sections) were not uniformly designed. This fact particularly affected subsequent maintenance, where the Section for Management and Maintenance has faced problems of maintaining a number of different systems, which have the same function.

For these reasons, a team of experts was set up from the Section for Design and Construction and the Section for Management and Maintenance with a task to address this problem i.e. to standardize as much as possible the systems that serve the same function on all sections of the motorway and to draft these instructions for designers, supervisory teams and contractors.
While analysing the above-mentioned problem, the team of experts ensured that the most up-to-date standards, recognized throughout the world, which cover the respective fields be applied. Also used were the experiences from previously implemented projects, good engineering practices, as well as design solutions applied on all completed projects or those that are still in progress.

Based on the above, a set of instructions was drafted, comprising the following:

1. Instructions for placing horizontal traffic signalization
2. Instructions for installing vertical traffic signalization
3. Instructions for the supply, installation and maintenance of garage doors on COKP (Traffic Control and Maintenance Center) facilities
4. Instructions for the design and construction of canopy structures on CP facilities
5. Instructions for the design and construction of flexible guardrails on the motorway
6. Instructions for the design and construction of noise protection panels (noise shields)
7. Instructions for the design and construction of protective wire fencing
8. Instructions for the construction of concrete pavement on CP
9. Instructions for energy certification of structures belonging to the JP Autoceste FBiH
10. Instructions for the design and installation of LED lighting
11. Instructions for the design and installation of low voltage systems
12. Instructions for the design and construction of roads in tunnels
13. Instructions for the design and construction of road structures on the motorway
14. Instructions for planning and carrying out asphalt work
15. Instructions for approving the material – fractioned aggregates
16. Instructions for approving fiber-reinforced shotcrete

17. Instructions for optical measurements of tunnels convergence
18. Instructions for designing security systems in tunnels at Corridor Vc
19. Instructions for design and construction of sustainable drainage systems on motorways in FBiH
20. Instructions for design and performance of blasting works at the motorway projects

In case of any collisions between given instructions, instruction number 18 has priority.

The Instructions are given here below.

1. INSTRUCTIONS FOR PLACING HORIZONTAL TRAFFIC SIGNALIZATION

Introduction

The Instructions for Placing Road Markings shall cover the placing of road traffic signs according to road traffic equipment designs, the Rulebook on traffic signs and road markings, methods for marking road works and barriers and signals given by authorized persons ("Official Gazette of BiH" No. 16/07) and other relevant legislation.

The Instructions describe the following:
- Types, shapes, dimensions and use of road markings;
- Quality of road markings;
- Traffic control at road works;
- Requirements for placing road markings;
- Road marking quality assessment, and
- Calculation of costs of works.

1.1. Types, shapes, dimensions and use of road markings

The road markings include the following:

1) Longitudinal markings,
2) Transverse markings, and
3) Other markings on the carriageway and objects along the pavement edge.

Road markings shall be painted, glued, embedded or impressed onto the pavement and they shall not reduce the coefficient of friction of the pavement surface. The road markings shall not be raised more than 0.6 cm above the pavement level.
Exceptionally, the road markings (delineators) used for centre or edge lines on structures or deviations may be raised more than 0.6 cm above the pavement level. Their height shall not exceed 2.0 cm above the pavement level.

The work technology used to apply or re-apply road markings shall include paint, cold plastic or cold plastic applying the technology of vibration tape.

The colour of road markings shall be white.

Exceptionally, the following markings shall be yellow:
- Places on the pavement or sidewalk where parking is not allowed,
- Parking spaces for people with disabilities,
- Traffic calming devices (speed humps and raised sections of pavement) and
- Temporary traffic diversions (temporary traffic regulation) and temporary hazardous locations resulting from road works.

1.1.1.Longitudinal road markings

Longitudinal road markings include center lines, edge lines and warning lines.

The centre line serves to separate the traffic travelling in opposite directions or traffic lanes in the same direction on bi-directional dual carriageways.

The edge line marks the edge of the road and separates special purpose lanes – public transportation lanes.

The centre and edge lines may be placed in the form of a noise or vibration tape.

The shape and dimensions of the longitudinal road markings shall comply with the requirements of BAS U.S4.221, BAS U.S4.222, BAS U.S4.223, and BAS U.S4.224;

The width of the centre dividing line according to the lane width:

1) over 3.50 m – 20 cm;
2) 3.00 – 3.50 m – 15 cm;
3) 2.75 – 3.00 m – 12 cm,
4) 2.50 – 2.75 m – 10 cm.

The width of the edge and centre lines shall be identical. For standard motorways it is 20 cm.

The longitudinal road markings include solid, broken and double lines, as well as edge lines.
The solid line (centre or edge) shall mark that it is not permitted to cross the line or drive across the line (Figure 1).

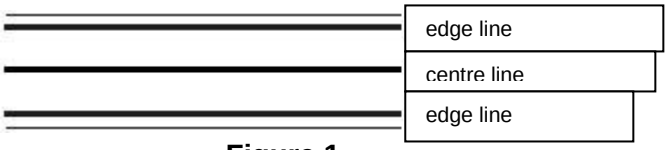

Figure 1

The broken line may be a broken centre line, a dotted line, a wide broken line or a warning line. The broken centre line divides the carriageway into lanes (Figure 2).
The length of the broken centre line gap shall be twice as long as the solid line segment on an open road and permissible speed > 60 km/h.

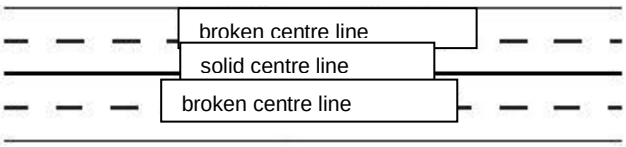

Figure 2

The wide broken line shall be used as an edge line separating traffic flows at a junction on roads outside urban areas and as an edge line for turning, exit and entrance on highways and motorways, i.e. expressways, and it is at least 30 cm wide (Figure 3). For standard highways, it shall be 50 cm wide. The length of the wide broken line gap shall be the same as that of the solid line segment. The length shall be 3.0 m.

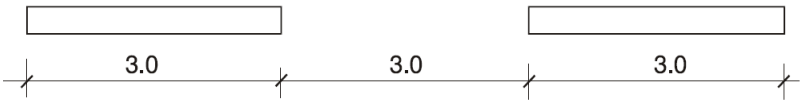

Figure 3

The warning line shall announce the solid centre line (Figure 4).

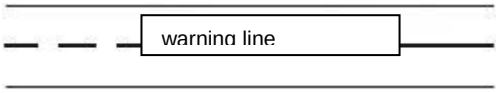

Figure 4

A double line may be a double solid line, a double broken line and a double combined line.

A warning line marking may be supplemented by one or more arrows indicating the lane to be used.

1.1.2. Transverse road markings

The transverse markings include the following:

1) Stop line,
2) Diagonal lines,
3) Closure lines,
4) Pedestrian crossings, and
5) cycle track crossings.

The transverse road markings shall be made in solid or broken lines and may cover one or more traffic lanes.

Given the angle at which a driver sees them, transverse road markings shall be wider than longitudinal ones.

The shape and dimensions of the transverse road markings shall comply with the requirements of BAS U.S4.225, BAS U.S4.226, BAS U.S4.227, and BAS U.S4.228;

The stop line may be solid or broken. The solid stop line shall mark the place where the driver must stop the vehicle. The word STOP (Figure 5) may be written on the road in front of the stop line. For a 3.00-3.50 m wide lane, the stop line shall be 0.50 m wide;

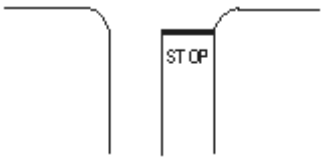

Figure 5

Diagonal lines shall mark the place where exit lane is open (Figure 6) and where entrance lane is closed (Figure 7) on highways, motorways and expressways:

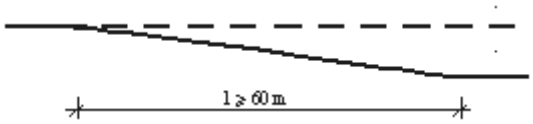

Figure 6

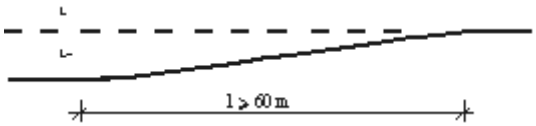

Figure 7

1.1.3. Other markings on the carriageway and objects along the pavement edge

Other markings on the carriageway and objects along the pavement edge include arrows, fields for traffic direction, directional arrows, letterings, markings for special purpose traffic surfaces, parking space markings and markings on objects along the pavement edge.

Materials or colours used for other road markings shall not make the road more slippery. These markings shall not be higher than 0.6 cm above the road level.

The shape and dimensions of the other road markings shall comply with the requirements of BAS U.S4.229, BAS U.S4.230, BAS U.S4.231, BAS U.S4.232, BAS U.S4.233, and BAS U.S4.234.

Arrows on the road mark mandatory direction of traffic if placed on the lane bounded by solid centre line. In addition, they inform drivers of the purpose of lanes if placed on the lane bounded by broken centre line.

Arrows may mark:
– Direction to be taken (Figure 8);
– Two directions (combined) (Figure 9 and Figure 10);
– Three directions (combined);
– changing the lanes at two nearby intersections, where lanes have to be changed before the first intersection where turning in marked directions is prohibited;
– Direction of movement in garages;
– Traffic diversion;
– No overtaking ahead.

Figure 8

Figure 9

Figure 10

Fields for traffic direction shall denote areas where traffic is prohibited and where stopping or parking of vehicles is not allowed:
– between two streams of traffic travelling in opposite directions (Figure 11);
– between two streams of traffic travelling in the same direction (Figure 12);
– at the start of a separate turn lane;
– before islands for separating traffic flow;
– on highway entrance slip roads (Figure 13);
– on highway exit slip roads (Figure 14).

Figure 11

Figure 12

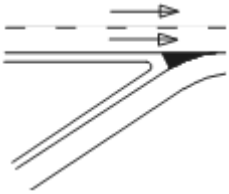

Figure 13

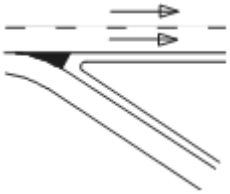

Figure 14

Directional arrows shall denote a change of the free road surface before solid obstructions situated on the road or on its edges.
Directional arrows may be placed before islands serving the public transportation vehicles to change the lane, or used to provide a barrier at the edge of the road, or to mark a change in usable road surface (Figure 14).

Figure 14

Letterings on the carriageway shall provide road users with necessary information, such as „STOP“, but also names of places like „SARAJEVO“, „ENC“, speed limit, etc.
The names of places shall be written in Latin script in the Federation of Bosnia and Herzegovina, and in Cyrillic script in the Republika Srpska.
International markings shall be written only in Latin script.
The letterings on the carriageway may be provided in the form of inlaid road markings.

Parking road markings shall denote places where vehicles can be parked. Parking can be longitudinal (Figure 15), diagonal (Figure 16) or perpendicular (Figure 17) relative to the edge of the road.

Figure 15

Figure 16

Figure 17.

The elements of the structure and furniture of public road and other objects representing permanent obstacles within the road clearance gauge shall be marked with red and white stripes, while black and white stripes shall be used for traffic cross-sections (Figure 18).

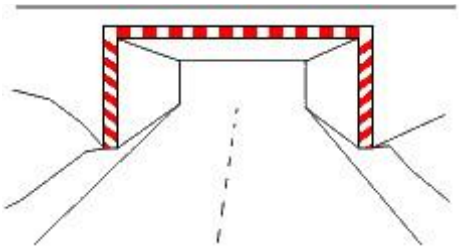

Figure 18

Evacuation route on the tunnel lining shall be marked along the whole length of the tunnel on the side where pedestrian and vehicular entrances are located, with a red (RAL 2002) 50-cm-wide line (Figure 19).
The evacuation route on the tunnel lining shall be applied so that its bottom edge is placed at the height of 90 cm from the pedestrian corridor level.

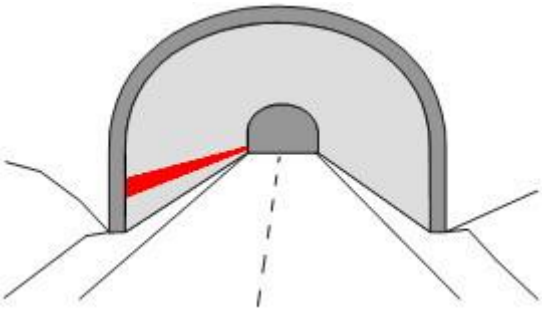

Figure 19

1.2.Colours permitted for use

The materials used for works on the placing of road markings on public roads shall comply with the following standards:

- EN 1436:2007+A1:2008 – Road marking performance for road users
- EN 13197:2001 – Wear simulator

- EN 1871:2000 – Physical properties

According to the above-mentioned standards, two systems (types) of road markings are specified, as follows:

- **Type I** for sections south of Mostar Sjever junction, with the following characteristics:
  - Paint film thickness of 400 mic
  - Reflective beads 100 to 850 mic
  - Good day-time visibility
  - Good night-time visibility under dry conditions
  - Reduced night-time visibility under wet and rainy conditions
- **Type II** for sections north of Mostar Sjever junction, with the following characteristics:
  - Paint film thickness of 600 mic
  - Reflective beads 200 to 1400 mic
  - Good day-time visibility
  - Good night-time visibility under dry conditions
  - Good night-time visibility under wet and rainy conditions

1.2.1. Minimum requirements

The minimum requirements for the white colour used for road markings are shown in the table below:

Type I, Type II
Q2
B2
R2
RW 1
RR 1
S1

1.3. Explanation of markings system

1.3.1. Road marking performance for road users - EN1436:2007+A1:2008

The road marking performance for road users shall be as follows:

- **Day-time visibility**
  Reference parameters (classes) for daytime visibility under dry conditions are given in the following table:

Colour of road marking	Type of road surface	Class	Minimum luminance factor under diffuse illumination Qd in mcd/m2 lx
White	Asphalt pavement	Q0	-
		Q2	Qd≥100
		Q3	Qd≥130
		Q4	Qd≥160
	Cement concrete pavement	Q0	-
		Q3	Qd≥130
		Q4	Qd≥160

		Q5	Qd≥200
Yellow		Q0	-
		Q1	Qd≥80
		Q2	Qd≥100
		Q3	Qd≥130

Table 1 – Reference parameters (classes) for daytime visibility under dry conditions

- **Night-time visibility**
  Reference parameters (classes) for night-time visibility under dry conditions are given in the following table:

Type of road marking	Colour of road marking	Class	Minimum retro reflected luminance factor RL u mcd/m^2 lx
Permanent	White	R0	-
		R2	R_L ≥100
		R3	R_L ≥150
		R4	R_L ≥200
		R5	R_L ≥300
	Yellow	R0	-
		R1	R_L ≥80
		R3	R_L ≥150
		R4	R_L ≥200
Temporary		R0	-
		R3	R_L ≥150
		R5	R_L ≥300

Table 2 – Reference parameters (classes) for night-time visibility under dry conditions

- **Visibility under wet conditions**
  Reference parameters (classes) for visibility under wet conditions are given in the following table:

Wet conditions	Class	Minimum retro reflected luminance factor RL in mcd/m^{2}lx
Values obtained 1 minute after the surface flooding	RW0	-
	RW1	R_L ≥ 25
	RW2	R_L ≥ 35
	RW3	R_L ≥ 50
	RW4	R_L ≥ 75
	RW5	R_L ≥ 100
	RW6	R_L ≥ 150

Table 3 – Reference parameters (classes) for visibility under wet conditions

- **Visibility under rainy conditions**
  Reference parameters (classes) for visibility under rainy conditions are given in the following table:

Rainy conditions	Class	Minimum retro reflected luminance factor RL in mcd/m^{2}lx
Values obtained after at least 5 minutes of exposure in compliance with B.7 during constant rain at an intensity of 20 mm/hh	RR0	-
	RR1	RL ≥ 25
	RR2	RL ≥ 35
	RR3	RL ≥ 50
	RR4	RL ≥ 75
	RR5	RL ≥ 100
	RR6	RL ≥ 150

Table 4 – Reference parameters (classes) for visibility under rainy conditions

- **Skid resistance**
  Reference parameters (classes) for skid resistance are given in the following table:

Class	Minimum value of skid resistance
S0	-
S1	SRT ≥ 45
S2	SRT ≥ 50
S3	SRT ≥ 55
S4	SRT ≥ 60
S5	SRT ≥ 65

Table 5 – Reference parameters (classes) for skid resistance

1.3.2. Wear simulators - EN 13197:2001

Wear simulators represent the value (amount) of the number of wheel passages (P) for the following values: Q, B, R, RW, RR, SRT.
The number of wheel passages for different traffic classes is given in the following table:

Traffic class	Number of passages
P0	-
P1	0.5×10^5
P2	1.0×10^5
P3	2.0×10^5
P4	5.0×10^5
P5	1.0×10^6

P6	2.0×10^6
P7	$> 2.0 \times 10^6$

Table 6 – Traffic classes

1.3.3. Physical properties - EN 1871:2000

The following physical properties shall be tested:

- Day-time visibility – luminance factor;
- x,y chromaticity co-ordinates
- Opacity (in accordance with ISO 2814)- min 95% for white colour
- UV ageing
- Bleed resistance
- Alkali resistance
- Storage stability - min 4

In addition to the above-mentioned properties, laboratory tests shall analyse the following:

- Density (according to EN 12802)
- Viscosity or consistence (according to EN 12802)
- Drying time (according to EN 13197)
- Durability (according to EN 13197)

1.4. Traffic control during the execution of road works

Prior to the commencement of road marking works, the contractor shall develop the design of traffic regulation during the road marking works and obtain approval for it from the Employer. The procedure for placing the markings shall enable traffic flow, without affecting the safety of road users or the team carrying out the road marking works. To this end, the contractor shall not refrain from involving traffic police patrols or use cones sparingly – they shall not be removed until the paint has completely dried.
The contractor shall be responsible for meeting all above-mentioned requirements, as well as for any detrimental consequences resulting from the execution of the works concerned. The contractor shall also be responsible for any possible damage caused by the marking paint sprayed onto the travelling vehicles because of the execution of the works concerned.
The Employer shall under no circumstances be held responsible for such damage.

1.5. Conditions for placing road markings

1.5.1. Weather conditions

The road marking works shall be carried out at an air temperature not lower than +10 degrees Celsius and not higher than +30 degrees Celsius, and relative humidity of air of not more than 85%. The optimum air temperature is 20-25 degrees Celsius, while the relative humidity of air is less than 75%. The sub-base shall be completely dry. The sub-base temperature ranges between 5 and 45 degrees Celsius (BAS Z.S2.240).

1.5.2. Road surface preparation

Prior to the application of paint, the road surface shall be completely dry, clean and free from any dust or salt residues. Oil and other grease stains must be removed.
The contractor shall carry out the general cleaning of pavement on public roads after the completion of winter service, which as a rule is done in the first half of April (for valley routes), or in the second half of April (for mountainous areas), and this shall not be included in the unit price for placing the road markings. The unit price for placing the road markings shall include prior removal of any impurities on the pavement.

1.5.3. Machines and equipment for placing road markings

Machines for longitudinal road marking shall be automatic. The necessary amount of paint and glass beads shall be regulated by automatic equipment. The machines shall be adjusted in such a manner as to ensure the prescribed geometry of markings and uniform application of paint or reflective glass beads. If problems regarding the quality of markings are observed during the work, the supervisory engineer may request the contractor to provide detailed manufacturer's instructions for use of the equipment. The contractor shall be requested to use the equipment in compliance with the above-mentioned manufacturer's instructions, notably the operating speed of the equipment during the placing of markings, or to make other adjustments until such quality of the markings has been achieved to the satisfaction of the supervisory engineer (the opinion of the supervisory engineer shall be supported by measurements and testing as required by the quality standard).

1.6. Assessing the quality of road markings

1.6.1. Quality control for placing road markings

In order to assess the quality of road markings, the following information on road marking works shall be recorded:
- Road category and section,
- The date and time of work execution,
- The type of equipment used,
- The type of paint and other materials used,
- The thickness of dry and wet films of markings,
- Material consumption per marking unit,
- The calculation of dry film thickness /paint manufacturer's specifications,
- Weather conditions during the execution of works.

The thickness of dry and wet films (excluding glass beads) shall be checked using test plates at an interval of at least 2,000 - 5,000 m of marked road, i.e. no more than 4 samples per day, particularly for centre and edge lines, and other types of markings.
The contractor shall be responsible for quality control and shall prepare and implement an efficient quality control plan. As part of the quality control, the contractor shall measure daytime and night-time visibility using a portable instrument not earlier than 30 days and not later than 60 days following the date of the application of markings. The measurements shall be made in one 500-m-long zone, on each section, where the section represents a part of the marking applied by one team during one day. The measurement zone shall begin in the

first third of the section's length. In each zone, 10 measurements of daytime and night-time visibility shall be performed at an interval of 50 m. The beginning and the end of the zone shall be marked by colour spray applied on the edge of the road.
If the thickness of the dry paint film of a marking equals or exceeds the minimum requirement on three of the four samples of the markings applied per day, the markings on the respective section shall be approved. If more than one sample of the markings applied per day falls short of the minimum requirement for the thickness of the dry paint film, the markings on the respective section shall not be approved, and the contractor shall have to re-apply them at their own cost.

In case the daily sample for any reason requires testing on fewer than four samples, all samples shall satisfy the required minimum thickness of the dry paint film.

If 80% (8 or more) of visibility testing in one zone satisfy or exceed the required minimum daytime and night-time visibility, the markings on that section shall be approved. If less than 80% (fewer than 8) of visibility testing in one zone satisfy the required minimum daytime and night-time visibility, the markings on that section shall not be approved, and the contractor shall have to re-apply them at their own cost.

1.6.2. Quality assurance for works carried out by the Employer

As part of quality assurance, the Employer shall perform measurements on a part of the works carried out with a purpose to verify and check the data submitted by the contractor as part of quality control. These measurements shall be performed at such places where the appearance of the markings points to possible mistakes in the results of measurements performed by the contractor or visual observations to that effect by the employer.
The results of measurements performed by the contractor shall be accepted if the average values of control testing made by the contractor do not differ by more than 10% from the respective average results of measurements performed by the Employer for a given section.

If the average results of both measurements on some sections differ by more than 10%, the contractor shall be required to perform the measurements again, in the presence of the Employer, the results of which shall be accepted as accurate.
During the warranty period of 6 months, the employer shall visually check the condition of the markings for any damage to them (cracking, bleeding, peeling off, colour loss, etc). Should the above-mentioned damages affect more than 90% of a marking's surface, the contractor shall – weather permitting - re-apply the marking at their own cost, starting not later than within 7 days following the receipt of a notice in writing to that effect from the Employer. Should such a deficiency come up during the warranty period, but later than 15 October of the current year, the contractor shall not re-do the damaged part of the marking without a specific approval from the Employer; however, such a deficiency shall be charged against the warranty in the amount of 30% of the contracted value of the marking on the damaged part.

Damage to markings caused by road damage shall not be considered during the identification of damages to road markings.

1.7. Calculation of costs of works

Work shall be measured per one meter of applied longitudinal and transverse markings and per one square meter of other road markings. It shall be charged applying the contracted unit price including all written work, material, transportation, marking, the quality control described, as well as anything else necessary to carry out this type of work

2. INSTRUCTIONS FOR PLACING VERTICAL TRAFFIC SIGNALIZATION

2.1. Description of work

The work shall include making, procuring and placing all kinds of traffic signs in accordance with the design of traffic installations. The work must be carried out in line with the Design, the Rulebook on Traffic Signs and Traffic Signalization, Method of Marking Works or Obstacles on the Road and Signs Given to the Participants in Traffic by Authorized Person („Official Gazette of BiH“ number 16/07), as well as with all applicable standards and requirements of the supervising engineer.

2.2. Manufacture

The type, meaning, form, colour, dimensions and method of placing the traffic signs shall comply with the Rulebook on Traffic Signs and Traffic Signalization, Method of Marking Works or Obstacles on the Road and Signs Given to the Participants in Traffic by Authorized Person, and standards applicable in Bosnia and Herzegovina.

2.2.1. Colour - conditions

Surface colour of the backside of the sign shall be grey and not shiny so that it would not draw the drivers' attention.
The surface of the traffic signs shall be made of materials having retro reflecting properties intended for use on motorways or roads exclusively used by motor vehicles –highways of the at least II class.

2.2.2. Required dimensions

Dimensions of the signs are specified in the Rulebook on Traffic Signs and Traffic Signalization, Method of Marking Works or Obstacles on the Road and Signs Given to the Participants in Traffic by Authorized Person and applicable standards.

When placing the vertical traffic signalization, use should be made of retro reflective foil of at least retro reflection class 2 – „High Intensity Grade“, stable against ultraviolet radiation and applied to aluminium sheet 2-3 mm thick, with reinforced frame and horizontal reinforcing that should guarantee quality and durability of the traffic signs.

Larger traffic signs, the surface of which exceeds 2 m^2, shall be made of profiled segments 20 cm high with connection grooves, which shall be combined into a single sign unit at the site of installation.

2.2.3. Placing and mounting

The traffic signs shall be mounted in a way that the place of connection is not visible from the front. In doing this, one must pay special attention not to use bolts and plates made of different materials (iron etc.) that might produce electrolysis. The connective elements must be made in a way that shall prevent pivoting of the traffic sign around the pole axis.

Traffic signs shall be mounted on the carrying poles of 63.5 mm diameter made of Al or Fe steel welded pipe and protected against corrosion by the hot-dip zinc coating process.

At the route of the motorway, the traffic signs (plates) of larger surface shall for the reasons of structural stability be mounted on the right side of the carriageway on I-profiles or cantilever poles – trusses; in cases, that the plates are mounted on portals above the carriageway additional security shall be required (cables).

Large rectangular signs shall be mounted on two or more poles, while extremely large signs shall be mounted on supporting structure that requires the calculations of structural stability. The calculations need to take into consideration local weather conditions (frequency, strength and directions of the winds, snow), the weight and surface of the traffic sign.

When mounting a traffic sign, it should be rotated by 3° from the road axis in order to avoid intensive reflection and reduce contrast of the markings, the sign and the lighted background. Not more than two traffic signs may be mounted on one pole.

Traffic signs shall be mounted at the level of 1.20 to 1.40 m above the road surface measured to the lower edge of the sign or of the additional plate mounted under the sign, on the right side of the carriageway. Exception from this rule are the traffic signs for driving around, and circular intersections (roundabouts), signs for road structures (tunnel, viaduct etc.) and signs showing the road number, highways, main roads, mileage on the motorway or highway, and indications of the section of the main road that are mounted at the height of 80-120 cm.

Traffic signs that are placed above the carriageway should be mounted at the level of at least 4.8 m to the lower edge of the sign from the road surface; however, the traffic signs are, as a rule, placed at the height of 5.0 m above the road surface.

The smallest horizontal distance between the traffic sign and the right edge of the carriageway shall be 0.5 m (for standard dimensions), while in case of lager signs it shall be min. 1.5 m (1.0 m). In the central section, the horizontal distance from the traffic sign to the left edge of the carriageway shall be at least 0.75 m. Traffic sign pole is typically placed not more than 2.0 m from the edge of the carriageway.

The foundations of the poles – carriers of the traffic signs shall be made in line with guidelines and standards applicable in Bosnia and Herzegovina.

2.3. Quality control

Materials used for the manufacture of the signs and poles are defined by standards, and the contractor shall provide at their own expense evidence that the materials satisfy the prescribed quality requirements before placing them. The original evidence shall be delivered to the supervising engineer.

2.4. Calculation of price of works

The works shall include the manufacture and delivery of traffic signals, procurement, transport and placing of the traffic signs, inclusive of poles and foundations. The price shall be calculated per number of placed signs of specific dimensions, including poles and foundation, while distinguishing signs by the number of signs on a single pole (pole with one sign – pole with two signs), and locations where bearing structure is made (a portal or cantilever pole).

3. INSTRUCTIONS FOR THE SUPPLY AND INSTALLATION OF GARAGE DOORS ON COKP BUILDINGS (CENTER FOR TRAFFIC MAINTENANCE AND CONTROL)

Introduction

Since there is a need to supply garage doors for the COPK, and those are not covered by the national standard, and there is a great variety in terms of quality, price and requirements in the market for the garage doors, we have conducted technical analysis and identified minimum requirements that the doors have to meet with the purpose of standardizing such requirements.

In our analysis we used available standards or European standards that regulate different areas in terms of technical requirements for garage doors, local market survey in order to assess the availability of the required items, as well as the assessment of the actual conditions of use of the doors and architectural and structural requirements of the building they are to be installed in.

When describing the minimum conditions we made regional distinction to take into consideration regional location of the place where the doors are to be installed, with its specific climate and temperature conditions, which the garage doors have to meet. In addition, possible architectural and constructive requirements of individual buildings were also taken into consideration; in this regard, it was established that there might be variations in minimum requirements in terms of fulfilling its foreseen purpose so that the door should meet the demands of the project in the best possible way.

Upon having conducted a full review of actual conditions of use of the garage door, we consulted European standards in order to precisely identify different classes of individual requirements.

The following standards were used in the analysis:

1. EN 12424 – Wind load resistance.
2. EN 12425 – Water penetration resistance.
3. EN 12426 – Air permeability.
4. EN 13241 attachments B EN 12428 – Heat Insulation.

Having taken into consideration all the facts and the above listed documents, we propose the minimum technical requirements that the garage doors for the COPK buildings should comply with.

3.1. Minimum technical requirements

Table 1. - Minimum technical requirements

	Wash		Garage for cargo vehicles		Mechanic's shop	
	Region 1	Region 2	Region 1	Region 2	Region 1	Region 2
Dimensions						
- Height	Up to 7.0 meters		Up to 7.0 meters		Up to 7.0 meters	
- Width	According to the design		According to the design		According to the design	
Wind load resistance EN 12424	Class 2	Class 3	Class 2	Class 3	Class 2	Class 3
Water penetration resistance EN 12425	Class 3	Class 3	Class 3	Class 3	Class 3	Class 3
Air permeability EN 12426	Class 2		Class 2		Class 2	
Noise insulation	No requirements		No requirements		No requirements	
Heat insulation (attachment B EN 12428) (U=W/m2K)	from 1.5 o 4.3		from 1.5 to 4.3		From 1.5 to 4.3	
Way of opening –electric lifting of the door with the manual option.	Yes		Yes		Yes	
Possibility of natural light	No possibility		No possibility / not necessary		No possibility / not necessary	
Protection against corrosion	Yes		Yes		Yes	
Resistance to aggressive environment						
A) resistance to salt	Yes	No	Yes	No	Yes	No
B) resistance to oils	Yes		Yes		Yes	
Safety – security against deterioration	Yes		Yes		Yes	
Number of open-close cycles	min 25.000 times		min 25.000 times		min 25.000 times	
5 year guarantee	Yes		Yes		Yes	

- Region 1 – Region of Bosnia, characterized by frequent snow, low winter temperatures, characteristic winter conditions for road maintenance.
- Region 2 – Region of Herzegovina, characterized by heavy winds, rare occasion of winter conditions for road maintenance.

Quality of heat insulation shall be selected on the basis of specific needs of the design.

4. INSTRUCTIONS FOR THE DESIGN AND CONSTRUCTION OF CANOPY STRUCTURES IN THE CP BUILDINGS

Introduction

These Instructions for Designers, Supervisors and Contactors was made with the aim of standardizing the canopy structures on the CP buildings, to apply to all buildings that are at the stages of design, preparation for construction and under construction.

Two types of canopies exist on the tollbooths of the A1 motorway, as follows:

- Canopy of space trusses made of steel pipes (option “A”)
- Canopy of rolled steel sections (option “B“)

The mentioned types of the canopies exemplified at the tollbooths of the A1 motorway are presented in the following figures:

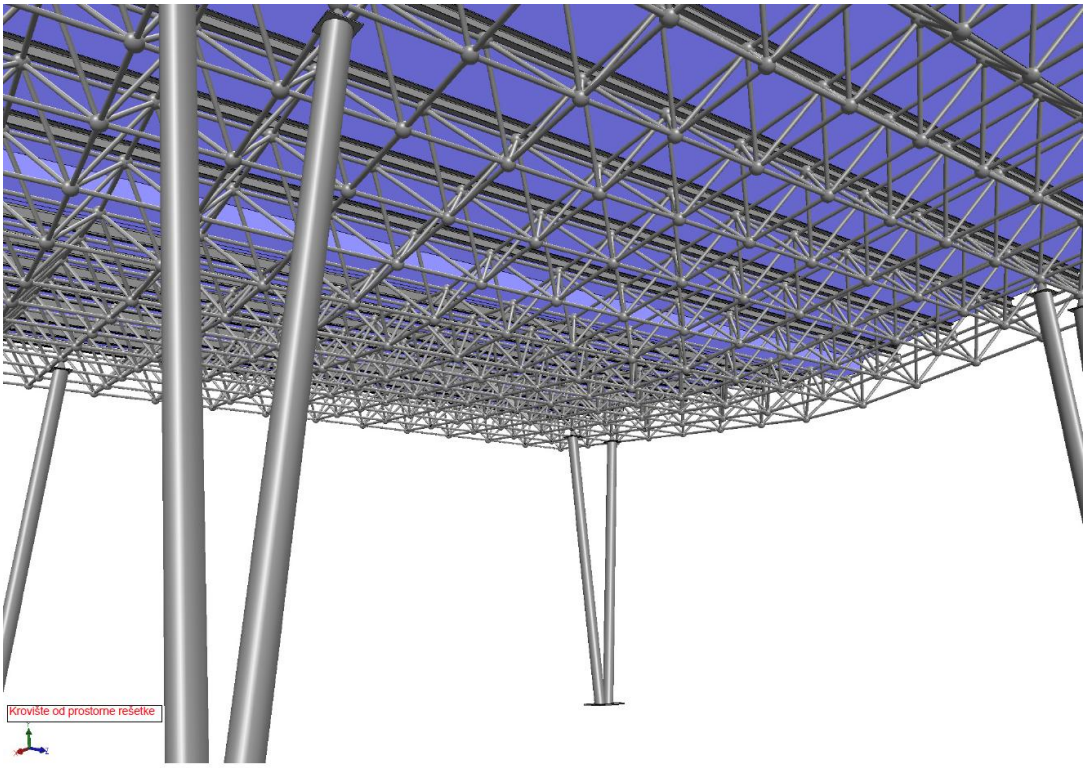

Figure 1. *Canopy of simple trusses made of steel pipes (Option „A“) – view from below*

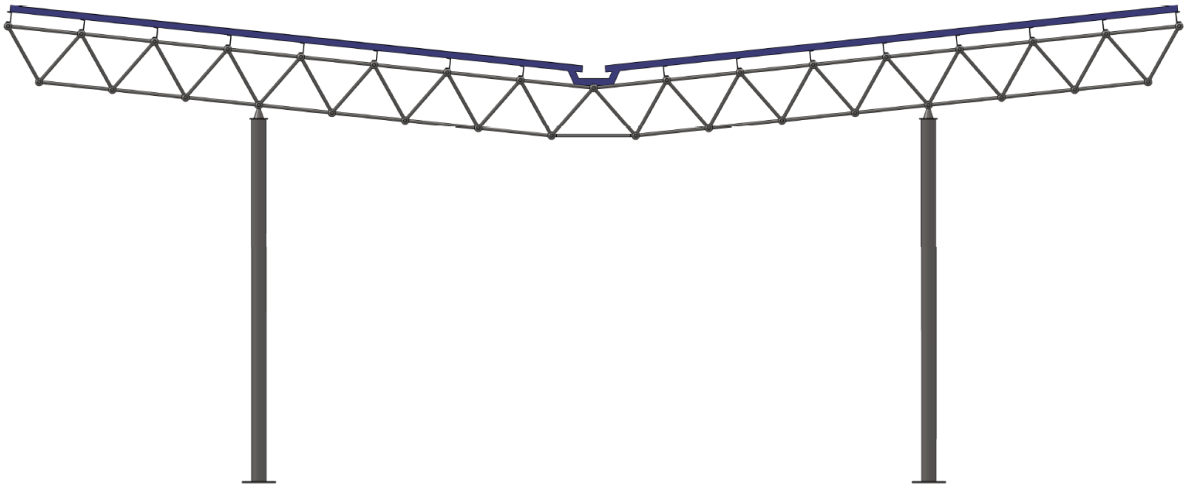

Figure 2. *Canopy made of space trusses made of steel pipe (Option "A") – cross-section*

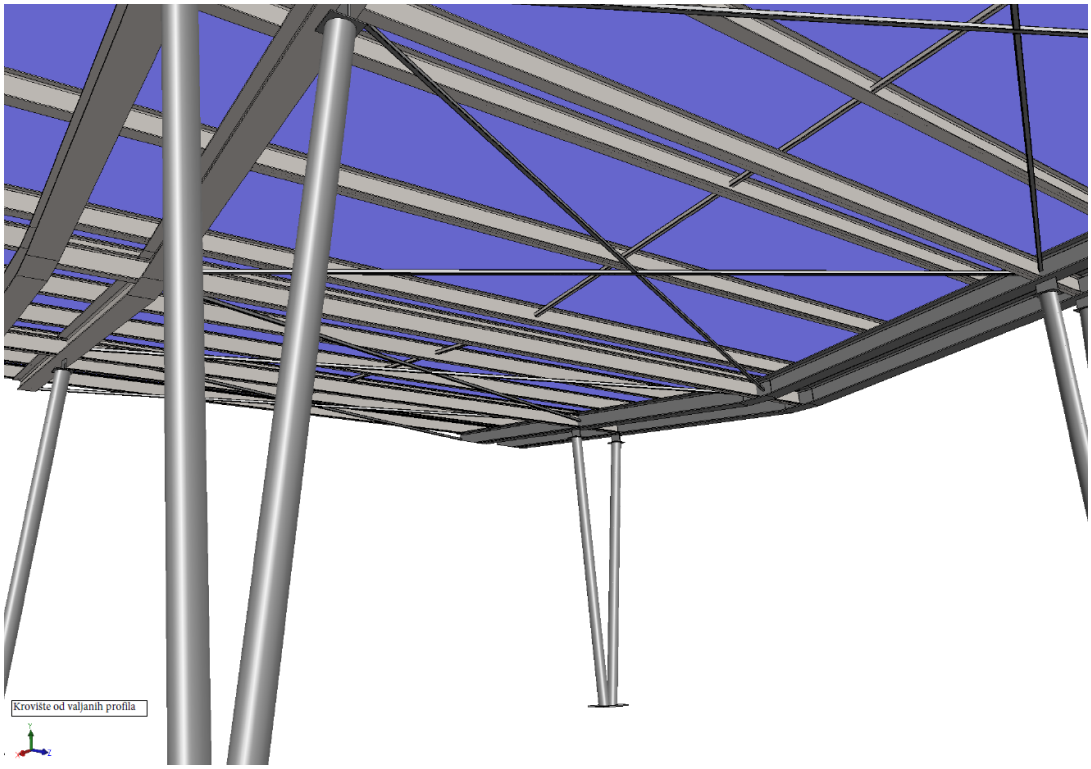

Figure 3. *Canopy made of rolled steel sections (option "B") – view from below*

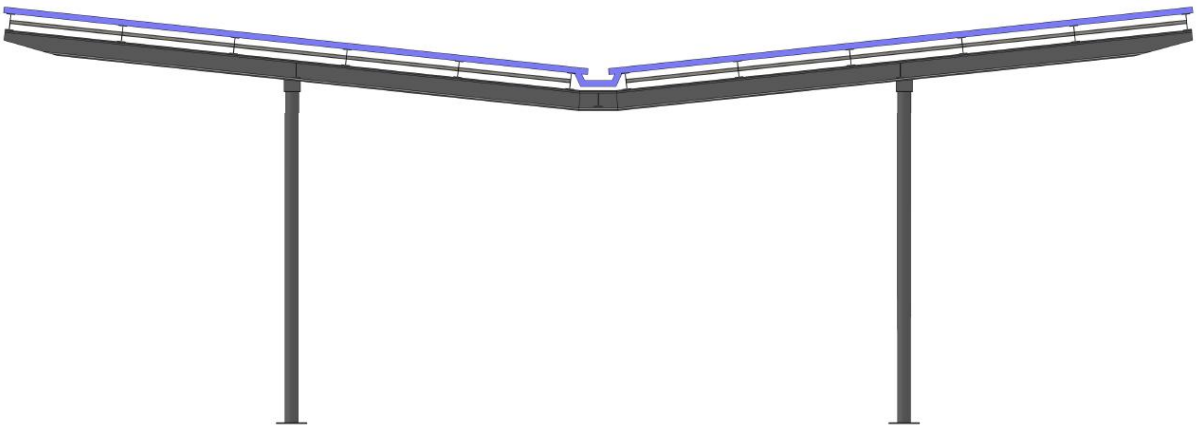

Figure 4. *Canopy made of rolled steel sections (option "B") – cross-section*

We must underline that both types are acceptable from the aspect of architectural as well as structural design.

The parameters considered for the purpose of standardization have been brought down to the economic analysis of the whole investment. The cost analysis of the whole investment has been done based on:

- Investment in construction
- Investment in maintenance

Detail cost analysis of the said parameters, which was done by experts, shall not be presented in this document; however, its main conclusions were:

- Cost analysis of the construction investment showed that the structure of rolled steel sections (Option "B") is by 40% more expensive than the structure of space trusses (Option "A").
- Cost analysis of the investment in maintenance, that included the parameters relative to cleaning and applying anti-corrosive protection over the period of 40 years showed that the structure of rolled steel sections (Option "B") is up to 5 times cheaper than the structure of space trusses (Option "A").

Conclusion

The above considerations suggest that the JP Autoceste FBiH should use the canopy structures made of rolled steel sections because their total costs are lower in spite of higher initial investment, and they should issue instructions to that regard to all designers, supervising teams and contractors.

5. INSTRUCTIONS FOR THE DESIGN AND CONSTRUCTION OF FLEXIBLE GUARDRAIL ON THE MOTORWAY

Introduction

Regulations applicable to guardrails on roads:

- Rulebook on Traffic Signs and Traffic Signalization, Method of Marking Works or Obstacles on the Road and Signs Given to the Participants in Traffic by Authorized Person (Official Gazette of BiH, number 16/07)
- (JUS U.S4.110, 1984)
- (EN 1317) – European Standard of 1993. European Norm 1317 has been harmonized as of January 1, 2008, with three years transitional period, so as of January 1, 2011, only the use of guardrails certified according to that standard, i.e. the CE certificate is allowed.

Rulebook on Traffic Signs and Traffic Signalization, Method of Marking Works or Obstacles on the Road and Signs Given to the Participants in Traffic by Authorized Person provides as described in the following Section H:

5.1. Section H. Guardrails;

5.1.1. Article 86 (Guardrails)

1. Guardrail is a technical safety structure the main purpose of which is to prevent sliding of the car off the (width of) road and to retain the vehicle that turns from the carriageway.
2. Guardrails may be made of steel, concrete (type New Jersey) or combined.
3. The guardrail must be installed:

- in the central reservation, depending on traffic intensity,
- on the road,
- when the road is on an embankment that is higher than 3.0 m.
- approximately another surface for traffic (rail tracks, water surface), except the surfaces intended for pedestrian use.

Guardrail class depends on the road category:

Road category	Road Edge	Central Reservation	Structure
Motorway Highway Road reserved for use by motor vehicles	H2–H1	H2	H3 – H2
Main road Regional Road High ranking city streets	H1	–	H2
Other roads	N2	–	H1 – H2

5.1.2. Article 87 (Guardrail design)

The guardrail must be equipped with retro-reflective marks (catadioptres) (VIII-3) on the right side (from the direction of driving) of the red colour, and white on the left side. On the carriageways with one-way traffic, retro-reflecting marks shall be red on both sides.

According to the BiH legislation, as prescribed in the Rulebook on Traffic Signs and Traffic Signalization, Method of Marking Works or Obstacles on the Road and Signs Given to the Participants in Traffic by Authorized Person, the guardrails shall be placed and mounted in accordance with EN 1317, and in compliance with the regulations.

5.1.3. Definition of bumper guardrail

The mantle is one of the basic elements of steel guardrail. It is made of hot-rolled steel band Č.0361, 3 mm thick, cold-formed into a section. At the ends of the mantle, there are openings for their mutual connection by bolts. When needed, they are delivered curved to follow the road curve.

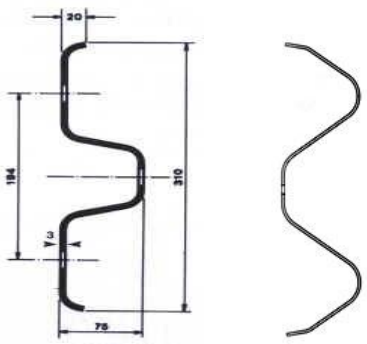

Type A

Type B

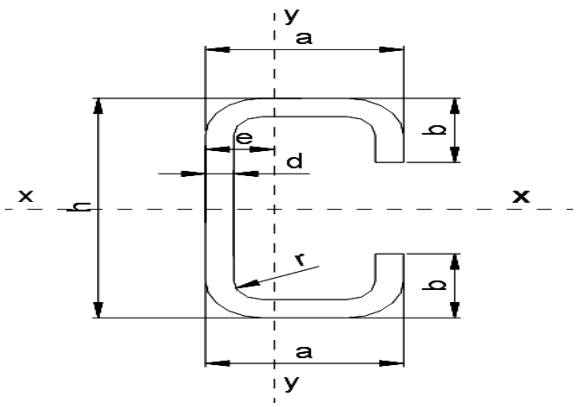

Type C

The height of the anti-glare system depends on general conditions, such as the relative heights of the headlights of the vehicles and the height of the drivers coming from the opposite direction. According to the European Norm EN 12676-1, when the height of the system is 1.18 cm from the road surface, it will protect drivers of light motor vehicles from all entry lines that may cause their blindness, while the system at the height of 1.67 m fully protects drivers of heavy motor vehicles.

The height of bumper guardrails from the road surface differs depending on the class of the rail.

The guardrails of protection class H2 (two-rows) and H3 (three-rows) due to their height may serve to prevent (especially in settlements) people from crossing the motorway.

Conclusion:

Starting from European norms and standards used in our country, having checked the chapter E of the main design of the road sections currently under preparation or construction, and taking into consideration the survey of guardrails on the already constructed section of the motorway A1, section Kakanj-Jošanica, and experience with maintenance, traffic protection and safety, we have observed the following:

- An overview of the main designs for construction of sections (Počitelj – Bijača, Lapenica – Tarčin, Vlakovo – Lepenica, Drivuša – Bilješevo) showed that the designers have provided for the guardrail on the open route of the high class H1 and H2, namely class H2 in the central reservation, and class H1 or H2 along the edge of the carriageway, what is in accordance with the European norm 1317 and our regulations.
- A site visit to the already constructed section of the motorway A1 Kakanj-Jošanica showed that the sub-section Visoko-Jošanica one-single guardrail without distancers was placed along the edge of the carriageway, while double-sided bumper guardrail with distancers was installed in the central reservation. Both guardrails have the type “B” mantle. The guardrails in question had been designed before the Norm EN 12676-1 (Official Gazette of BiH number 16/07) entered into force, so we can discuss them only from the visual aspect.

In the sub-section Kakanj-Visoko, a single-sided guardrail with distancers was placed both on the edges of the carriageway and in the central reservation because of the drain trench that passes along the central reservation. The fence is equipped with the “B” type mantle, and visually appears to belong to a high protection class.

Because of the time of its construction and changing standards in this area, we cannot consider the constructed section as a reference on which to base the standardization of the bumper guardrails.

- The height of the anti-glare system depends on general conditions, such as the relative heights of the headlights of the vehicles and the height of the drivers coming from the opposite direction. According to the European Norm EN 12676-1, when the height of the system is 1.18 cm from the road surface, it will protect drivers of light

motor vehicles from all entry lines that may cause their blindness, while the system at the height of 1.67 m fully protects drivers of heavy motor vehicles. Having the said in mind, installing class H2 guardrail of two-row type (due to their height which is approximately 1100 mm) instead of the Class H1 and H2 guardrails (height approximately 750 mm) in the central reservation may be considered justified also from the aspect of the service level of the motorway, anti-glare properties and reducing the necessity of additional installations for preventing the users of the motorway from being blinded.

- Having in mind the experience of the operation of the constructed section of the motorway, installation of the H3 class bumper guardrail (height approximately 1650 mm) is worth considering in the areas where one might expect pedestrians to try to cross the road (resting sites, settlements etc.). In addition to improving safety of traffic, the guardrail would here also act as a physical barrier preventing any crossing of the motorway.

Therefore, the following conclusions may be inferred from the above considerations:

- **In the central reservation, insist on the use of bumper guardrail of at least H2 class, two-row type where possible, while Class H3 should also be used in special cases;**

- **Along the left and right edge of the motorway, install bumper guardrail with distancers of at least H1 protection class. When needed, and when so dictated by the terrain, the designer shall also foresee guardrail of higher protection classes: H2, H3 and, on exceptional basis, H4a and H4b.**

6. INSTRUCTIONS FOR THE DESIGN AND INSTALLATION OF NOISE PROTECTION PANELS (NOISE SHIELDS)

Introduction:

The purpose of noise shields is to mitigate the noise pollution in urban areas and create positive environment for people to live in.

The choice of location for the noise shields, the height of the panels and quality of noise absorption shall be made by the designer based on noise calculation model. The noise shields are typically placed in urban areas where the level of noise caused by traffic exceeds the level allowed by the law.
Having in mind relatively high costs of noise shields construction and maintenance, the noise shields should be standardized in order to optimize costs.

To facilitate choice of the appropriate structure, here we list the core requirements the noise shield shall comply with.

Requirements for sound barriers	
Architectural requirements	> Visually fits with its surroundings.
	> Avoiding monotonous appearance of the wall.
	> Creating environmentally acceptable surroundings.
	> Creating a positive psychological effect for drivers as a consequence of change in rhythm, repeating the same segments, use of variety of textures and colours, broken forms and changed height of the sound barriers.
	> Emergency exits.
Functionality requirements	> Meeting requirements regarding noise absorption and reflection based on the noise calculation.
Structural requirements	> Attached evidence of stability for each individual part of the barrier, as well as for the barrier as a whole.
	> Use of standard materials.
Use of prefabricated systems	> Faster installation.
	> Reduced costs.
	> Standard installation system.
	> Standard panel types.
	> Facilitated maintenance.
Requirements for materials used	> Resistance to corrosion.
	> Resistance to frost.
	> Resistance to salts.
	> Resistance to UV radiation.
	> Good noise absorption properties.
	> Prescribed mechanical characteristics of the materials used for the structure.
Maintenance requirements	> Standardized system for producing sound barrier elements.
	> Standardized installation system.
	> Lower costs of production, transport and installation.
	> Easier cleaning.
	> Easier transport and installation of the damaged or deteriorated panels.
Durability requirements	> Duration of the system is 20 years.

Based on experiences of neighboring countries and designing practice in our country, it was found that the barriers might be divided by their cost effectiveness and height to 3 groups: low, medium and high.

Division of sound barriers by height.			
	Height	System	
Low	from 0,0 to 3,0	At will:	Foundation.
		Typical:	Post.
			Pre-fabricated panels.
Medium	from 3,0 to 6,0	At will:	Foundation.
		Typical:	Post.
			Pre-fabricated panels.
High	> 6,0	At will:	The whole construction dependent on the architectural solution.

High barriers are quite complex structures, often with curved walls, very expensive, which are used in urban areas or near high-rise buildings. Due to very low probability of the necessity of their use, such high sound barriers will not be further considered in these guidelines.

Low and medium high barriers are suitable for protection in rural areas through which the Corridor Vc mainly goes.

Since it is possible that the level of noise might increase during the exploitation of the road, and due to relatively small additional investment required to increase the height of the barrier, it is considered optimal to set dimensions of the post anchors and foundation structures at the size that would be adequate for at least the height of 5.0 meters, irrespective of the actually designed height of the wall.

Although there are several kinds of posts that are used for barriers, steel posts HEA(B) 120-280 are considered to best fulfil majority of the requirements.

Those posts have the following advantages:

- Availability at the market;
- Possibility to mount all types of panels on them;
- Simple and easy installation;
- Flexibility that enables replacement of damaged posts or other
- The posts may be recycled;
- Relatively low-cost maintenance.

The only serious disadvantage of the steel posts is their initial price, which is 3-5 times higher than the price of the concrete posts.
The production of the concrete posts, on the other hand, is rather low-cost. They can be used only to support concrete panes. Due to their relatively high weight, their transport and installation are more demanding. Since the walls are solidified (monolythisized) upon installation, there is no flexibility that would allow for increasing the height of the wall, or to recycle the same posts.

In conclusion, the recommendation to the designers is to prevailingly use steel posts, except in such cases where the use of concrete posts is well justified.
The noise protection panels can be made of various materials, depending on the needs at the location of their installation. One major condition is that they have to comply with the requirements concerning noise absorption and reflection. Another important thing concerns the standardization of the dimensions of the panels and the method of fixing them onto the posts.
Here is a Table of minimum requirements for all elements of sound shields, as well as the standards where they are specified.

6.1. Minimum technical requirements

Minimum requirements per structural elements			
Structural element	Material	Requirements	Standards
Foundation	Reinforced concrete	Material quality: C25/30 XC2	Eurocode 2
Post	Reinforced concrete	Material quality: C30/37 XF2	Eurocode 2
	Steel	Material quality: Č 0361	JUS
		Surface protection: hot- dipped zinc coated 85 μm	
Noise protection panels	Reinforced concrete	Material quality: C30/37 XF2	Eurocode 2
		Sound absorption: DLα > 5 dB	EN 1793-1
		Sound isolation: DLR > 24 dB	EN 1793-2
	Aluminium	Dimensions and quality standard.	DIN 52210
			DIN 52212
			Din 1725/1
			ZTV-LSW 88
		Sound absorption: DLα > 5 dB	EN 1793-1
		Sound insulation: DLR > 24 dB	EN 1793-2
	Wood	Vacuum impregnation of wood	DIN 68 800, T3
		Protection against fungi and insects.	DIN 68 800, T4
		Sound absorption: DLα > 5 dB	EN 1793-1
		Sound insulation: DLR > 24 dB	EN 1793-2
		Use of wood to make various elements.	DIN 4074
		Dimension and quality standard	DIN 52210
			DIN 52212
			Din 1725/1
			ZTV-LSW 88
	Plexiglas	Dimensions and quality standards.	DIN 52210
			DIN 52212
			Din 1725/1
			ZTV-LSW 88
		Sound absorption: DLα > 5 dB	EN 1793-1
		Sound insulation: DLR > 24 dB	EN 1793-2

7. INSTRUCTIONS FOR THE DESIGN AND INSTALLATION OF PROTECTIVE WIRE FENCING

Introduction

The purpose of placing protective wire fences on motorways is to improve road safety by preventing crossing of people and wild game over the motorway, as well as illegal access of vehicles from other roads onto the motorway.

The protective wire fences shall be installed along the whole length of the motorway, except where there are other natural or artificial barriers that effectively replace the protective wire fencing.

Since a need has occurred to standardize the design solutions for wire fencing, we have conducted technical analysis and specified the requirements that the design solutions shall comply with.

The following standards were used in the analysis:

1. BAS EN 10240; Internal and/or external protection of steel pipes – Specification for hot-dip galvanization in automatic machines (supporting posts and angled support)
2. BAS EN 10244-2; Steel wire and wire products – coating of non-ferrous metallic coating on steel wire – Part 2: zinc or zinc alloy coating (drag wires, mashes, clips),
3. BAS EN 10204; Metal products – types of Inspection documents (turnbuckle hook and eye)
4. BAS EN 10219-1; Cold formed welded structural hollow sections of non-alloyed and fine grain steels – Part 1: Technical conditions for delivery
5. BAS EN 10016-1; Non-alloyed steel rod for drawing and/or cold rolling – Part 1: General requirements
6. BAS EN 10016-2; non-alloyed steel rod for drawing and/or cold rolling – Part 2: specific requirement for rods for general purpose
7. ISO 1461 - braces

These instructions shall prescribe the type and core requirements for the protective wire fencing, while all other requirements the scope of which exceeds the format of this document shall be in line with the above listed standards and regulations.

Upon consideration of all facts including all applicable standards, here we propose the minimum technical requirements that the protective steel wire fencing shall meet.

7.1. Minimum technical requirements

Table 1 – Minimum technical requirements

All elements of the fence shall be hot-dip galvanized, all in accordance with the European Norms	
Zinc used for coating according to BAS EN 10244-2 standard shall be 99.95% pure	
Description of the elements of the fence	
Interim posts (line post)	- Line post diameter is ø60, 3 mm, height 2450 mm. Of this length, 750 are in the foundation, and 1700 mm is visible above ground. - The posts are founded on a concrete foundation 80 cm deep, in concrete of hardness class C 16/20 - Distance between posts is 350-400cm. - Thickness of the post wall is 2mm according to BAS EN 10219-1 - Zinc-coating complies with BAS EN 10240-Class A.1, 55μm
Strainer post and supporting post	- The strainer post and support post shall be made of the same material as the line posts, and subject to same conditions with regards to foundation, zinc-coating and wall thickness. - Distance between strainer posts shall be 25 m and they are connected with zinc-coated braces that are fixed with galvanized bolts M8.
Mesh	- The wire mesh shall have openings 60x60 mm, wire diameter 2.7 mm and height of 1400 mm. - The mesh shall be fixed to the strainer posts by staples of 2 mm and zinc-coated in accordance with EN10244-2. Connection shall be done on 3 strainer wires each 30-50 cm. - The mesh may be additionally fixed by wedges into the soil to prevent animals from going under it. The mesh may not be more than 5 cm above the soil. The wedges shall be zinc-coated with a hook at the top, and their dimensions shall be 50-80 cm and they shall be placed at the distance of 1.0 m. “Wedging” of the fence serves at the same time as grounding of the protective wire fence. - The mesh shall be zinc-coated in accordance with EN 10244-2 – Class A, 245g/m^2
Straining wire	- The mesh shall be affixed with help of three straining wires of 3.0 mm in diameter. Two wires shall extend along both ends of the mesh, and the third is in the middle. - Two additional straining wires shall be placed above the mesh, at the distance of 150 mm. - Staining wire for posts shall be fixed with self-cutting screws on pads, and they shall be strained by zinc-coated turnbuckles (hook-and-eye). - The tensile strength of the wire shall comply with BAS EN 10016-1 and BAS EN10016-2, meaning 350-500 N/mm2 - Zinc-coating shall comply with EN 10244-2 – Class A, 245g/m^2

8. INSTRUCTIONS FOR THE CONSTRUCTION OF CONCRETE PAVEMENT ON CP

Introduction

Detailed analysis of constructed tollbooths on the motorway: Jošanica, Podlugovi and Visko, pointed at certain shortcomings of the concrete pavement at the tollbooth sites. The biggest identified problem concerned placing of the equipment used for control and management (installation pipes, inductive loops, etc.). Because of the above, the concrete pavement at the mentioned tollbooth sites had to be reconstructed, resulting in additional costs, traffic jams and delays at the tollbooths. Aiming to avoid such problems in the future, we have made these instructions for all designers, supervising teams and contractors, to be used for all sections that are currently at the stages of design, preparation for construction, or construction.

8.1. Minimum technical requirements

8.1.1. Geometry

Not getting involved in the standardization of the technical solution, as this is going to be a subject of some future instructions or guidelines, these instructions sets the minimum distance from the beginning of the concrete pavement on tollbooth sites compared to the tip of the island. Therefore, if the length of the island tip to tip is L=30 m, the concrete island must be extended by 3 m from the tip of the island thus providing enough space to put equipment, as well as the space for good transfer from asphalt to concrete pavement.

In parallel with the said requirement, one must make sure that the concrete pavement has expansions at each 6 meters, with expansion joints.

8.1.2. Quality of concrete pavement

As the national legislation, norms, regulations and standards fail to define this area, the designers, supervising teams and contractors are hereby advised to use, but not restrict to, in designing and constructing the concrete pavements the General Technical Conditions from the Republic of Croatia (Opći tehnički uvjeti OTU iz Republike Hrvatske), Volume IV, Part 7-02 Concrete pavement, which clearly describe the following:

- 7-02.1. Quality of the concrete pavement
- 7-02.1.1 Composite materials
- 7-02.1.2 Concrete
- 7-02.2 Dimensions of concrete pavement
- 7-02.3 Expansions
- 7-02.4 Dowel joints and anchors
- 7-02.5 Reinforcing
- 7-02.6 Making
- 7-02.7 Control and confirmation of compliance of the works performed
- 7-02.8 Calculation of costs of works.

8.1.3. Special requirements

Special requirements related to designing and performing concrete pavements are the following:

- Reinforcing the concrete pavement should be designed in such a way that there must be a protective layer from the top surface of the pavement of at least d=7 cm.
- Rigging the surface of the pavement provides skidding resistance.

9. INSTRUCTIONS FOR ENERGY CERTIFICATION OF THE STRUCTURES BELONGING TO THE JP AUTOCESTE FBiH

Introduction

It is the position of the JP Autoceste FBiH to construct energy efficient structures of the class A+ or A. These Instructions direct the designers, supervising teams and contractors to comply with the current regulations concerning the physics of the building and thus enable technical acceptance of the building, and to construct buildings of energy class A+ or A.

9.1. Instructions

For all structures that are at the stage of design, the designers, when designing, shall take into consideration the above-specified conditions.

For the structures that are at the stage of preparation for construction, it is necessary to conduct a public procurement procedure to hire a consultant to analyse the structure and propose a solution to meet the above stated conditions, in order for the structures to comply with the "Rulebook on technical requirements for heat insulation of buildings and rational use of energy". The consultant's task shall be organized in four stages:

In the first stage, the consultant's task is to:

- conduct analysis of the existing documentation of the building that are heated to the temperature above 12°C,
- identify possible shortcomings of the design in view of the requirements from the Rulebook on technical requirements for heat insulation of buildings and rational use of energy (hereinafter: the Rulebook),
- make calculations and confirm the technical characteristics in accordance with Article 7.

In case that the existing solution fails to meet the requirements from the Rulebook for the given type of structure, the Consultant shall approach the second stage of the task:

In the second stage, the consultant's task is to:

- propose an alternative solution for the buildings that fail to meet the requirements of rational use of energy. The alternative solution shall be based on the use of materials of different thermal properties than the ones from the original design (e.g. use of brick or clay blocks instead of concrete elements wherever possible), different thickness of insulation materials, etc.
- once the Contracting Authority accepts the proposed solution, make appropriate architectural design with a technical description, all necessary drawings and bill of quantities.

In the third stage, the consultant's task is to prepare a technical solution that would satisfy the requirements from the Rulebook, all in accordance with the provisions of Article 49 of the Rulebook:

- Technical description
- Calculation and confirmation of technical characteristics in accordance with Article 7,
- Calculation of annual heat energy required for heating or cooling for actual temperature data
- Program of control and quality assurance during construction

- Necessary drawings
- Methodology of monitoring of the structure while in use
- Schedule of required heat energy in accordance with article 55 and Attachment D.

In the fourth stage, the consultant's task is to:

- Carry out energy certification of the structure in accordance with the provisions of the Rulebook on Energy Certification of Buildings
- Complete all other obligations arising from the Rulebook on Energy Certification of Buildings

The Consultant shall possess a license issued by the body responsible for energy certification of buildings.
In addition, the Consultant has to make sure that its team of experts to whom this assignment would be given includes:

- at least one B.Sc. in mechanical engineering who has the license to conduct energy certification;
- at least one B.A. in Architecture who has license to conduct energy certification.

In case that the second stage of the task is required, the consultant has to engage a subcontractor who has the license to make architectural designs.

10. INSTRUCTIONS FOR THE DESIGN AND INSTALLATION OF LED LIGHTING

Introduction and area of application

JP Autoceste FBiH as social responsible company with the mission to construct, manage and maintain modern motorway infrastructure, respecting the highest demands of social environment and fulfilling our consumers' needs attempt to all its activities to harmonize with the highest technological standards and apply it in its everyday activities.

General position of the JP Autoceste FBiH is that we should use as little energy as possible for lighting; hence, these Instructions were made for all designers, supervising teams and contractors, and for all sections that are in the stage of designing, in the stage of preparation for construction or in construction stage.

The subject of these Instructions is designing and pre-designing of external lighting at the tollbooth sites the external lighting at interchanges, resting places and the COKP as well as the designing lighting in tunnels that are longer than 1000 m.

The new designs of lighting shall be based on LED technology.

There are many advantages to the LED technology, some of which are listed below:

- lower power consumption
- higher efficiency of light spectrum
- longer life (approximately 50,000 work hours, in optimal conditions)
- negligible rate of initial failures
- smaller dimensions of the lamps
- high resistance to mechanical damage and vibrations
- direct emission of light
- no IR or UV radiation
- lower power absorption
- minimum heat dissipation
- lower CO2 emission

Since the critical element of the LED lighting is the Driver, special attention should be paid to the selection of this element; besides, one should be careful about the origin of the LED chip, and the selection of manufacturers of the LED lamps (e.g. LED modules of Philips, Osram ...) and in design documents require appropriate guarantees the manufacturer gives exclusively in declaration.

In case it LED lighting for tunnels shorter than 1000m is suggested, design should be include analysis of economic justification for replacing classical lighting system with high-pressure Na bulbs and metal-halogen bulbs with designed LED technology lights.

The design shall provide an analysis of economic and technical justification for replacing the designed lighting system with high-pressure Na bulbs and metal-halogen bulbs with newly designed LED technology lights.

The design that applies to the tollbooths and COCK shall contain the designed location of lights, as well as the number of lights (if possible); if parameters of light calculations cannot be met, certain alteration in terms of location and number of newly designed lights is allowed.

10.1. Design bases

The design shall be made in line with the terms of reference, applicable technical regulations, rulebooks, standards, guidelines and recommendations.

Purpose of high efficiency tunnel lighting is to enable that visual perception of driver is kept during night and day driving conditions, while avoiding unaccepted changes in level of lighting at the entrance and exit of tunnel.

The subject of these Instructions is designing and pre-designing of external lighting at the tollbooth sites the external lighting at interchanges, resting places and the COKP.

10.1.1. Technical parameters for lighting:

	Carriageway (main direction)	Carriageway (entry-exit)	Pay toll plateau
Class of the road lighting	M1	M2	C1
Minimal working value of average luminance	L_{aV} = 2,0 Cd/m^2	L_{aV} = 1,5 Cd/m^2	
Minimum general luminance evenness (uniformity)	U_0 =0,4 (40%)	U_0 =0,4 (40%)	
Minimum longitudinal evenness of luminance	UI = 0,7 (70%)	UI = 0,7 (70%)	
Minimum value of surroundings coefficient	SR = 0,5	SR = 0,5	
Maximum allowed value of glare threshold increment	TI = 10%	TI = 10%	
Average luminance of parking lot			E_m = 30 lx
General evenness of lighting in the parking lot			J_r = 40%

The listed quality parameters for road lighting are minimal. The design may propose better solutions; however, the criteria of cost-effectiveness and environmental impact must be met.

10.1.2. Lighting according to tunnel length

Requests for tunnel lighting are different for short and long tunnels. Tunnel visibility depends primary on tunnel length, but also on other geometrical tunnel parameters (depth, height, horizontal and vertical curve etc.). Usually, tunnel are divided at: “long tunnels” and short tunnels”
Division on long and short tunnels is not only based on tunnel length but also on basis of possibility of driver to see end of tunnel at the entrance position. Hence, long tunnels are also the ones that are shorter but where driver do not see end of tunnel at the entrance position. Lighting of such tunnels should be treated as in other tunnels.

Based on division on lighting tunnels can be divided in three category:
- Geometrical long tunnels
- Optical long tunnels

- Short tunnels
For detail dimension of lighting possibility of tunnel visibility should be defined graphically.

10.1.3. Tunnel lighting according to allowed speed of vehicle

Allowed speed of vehicle moving should be taken into consideration for system dimension of tunnel lighting. Generally, it is a speed level on the basis which tunnel is dimensioned.

10.1.4. Tunnel division on zones based on level of lighting

Beneath is shown scheme of tunnel division on characteristic transition zones. While dimensioning of needed LED lighting correct definition of these zones should be taken into consideration, and complete calculation base on it.

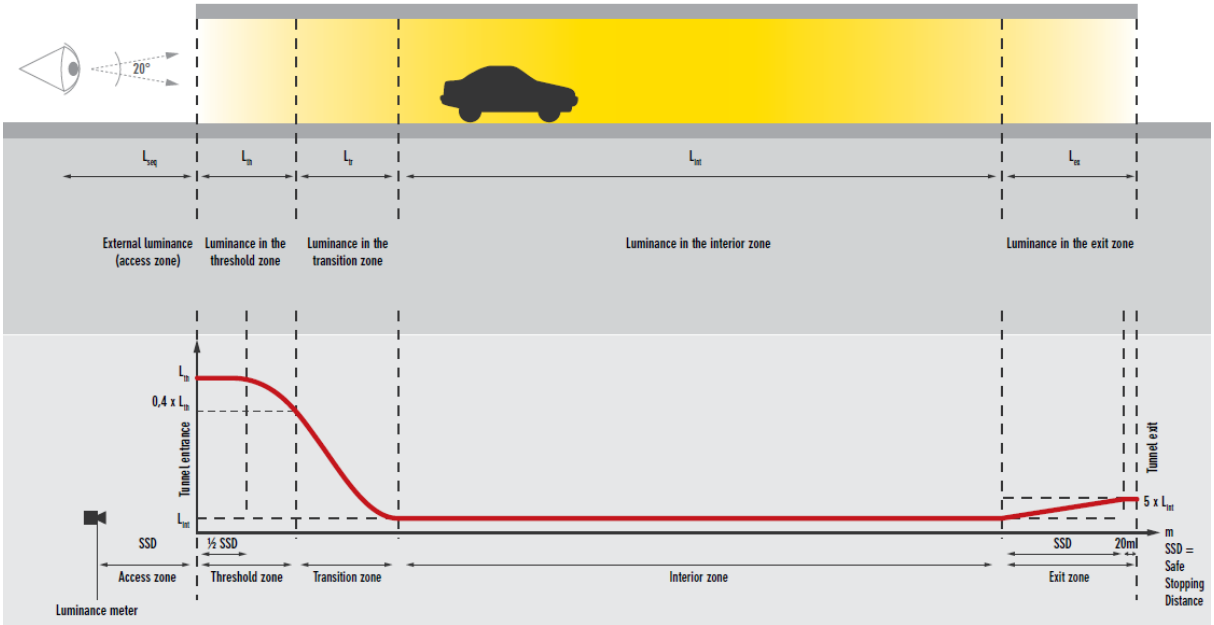

Access zone (access zone- L20) – is part of traffic that is directly in front of tunnel entrance from which beginning is necessary to eventual barriers in tunnel. Beginning of access zone is away for the length equal to stop road of vehicle. Access zone should enable as better and as faster vision adaptation in tunnel as possible.

Threshold zone (threshold zone - Lth) – is access zone of tunnel where is necessary to have high level of brightness which will enable for driver that even before entering into tunnel under influence of brightness out of tunnel to recognize eventual barriers inside of it. Length of threshold zone is minimum equal to length of stop road of vehicle, defined by vehicles speed and quality of road cover.

Transition zone (transition zone - Ltr) – continuing on thresh limit zone where brightness in tunnel gradually and rightly decreasing, without danger that visual conditions become unstable.

Interior zone (interior zone- Lin) – is part of tunnel where drivers vision is adapted to the minimum brightness in tunnel, which is constant until very end of tunnel.

Exit zona (exit zone - Lex) – has purpose to adapt drivers sight while exiting tunnel.

10.1.5. Shimmer noted during moving through tunnel

While driving through tunnel driver cannot be distracted with light shimmering. Shimmering is noticed during different frequentation of light perception, depending on speed limit and distance between lighting. Lighting should be dimensioned and allocated so that this effect is avoided.

10.1.6. Contrasts according to type of tunnel lighting

Drivers have to have possibility to detect any kind of barrier regardless its position or location at different parts of tunnel. For this purposes contrast must be created between barriers and its background. Set off barriers might be in a way to be more lighted than its surrounding or to be more darkened, which can be done directing light in another direction inside of tunnel.
There are three models of inner lighting shown beneath:
- Symmetrical lighting (vehicle and barriers are identically lightened)
- Asymmetrical lighting with negative contrast (barrier is darker lighted)
- Asymmetrical lighting with positive contrast (barrier is lighter lighted)

Scheme of lighting of vehicle and barrier is shown beneath:

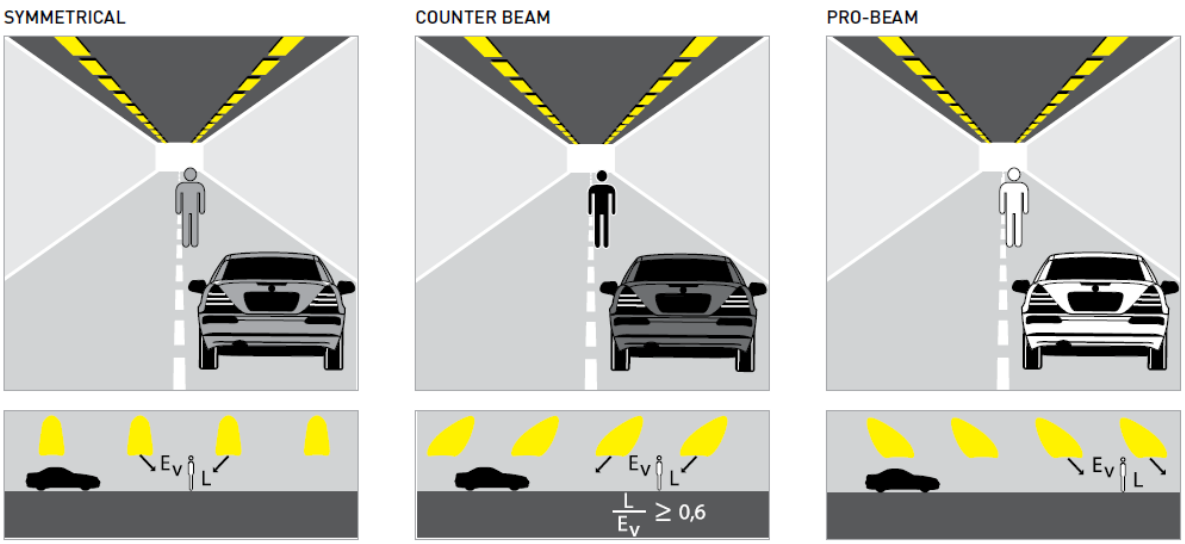

10.1.7. Technical normative

As main document for design of photometrical project technical normative of European Commission for lighting EN/CR 14380 - Anex A2 are being used. Mentioned measures of road lighting quality are minimized. Project can bring more quality solution but economic and environmental impact criteria must be met.

10.2. Technical conditions

10.2.1. Technical solution.

In addition to the main function (lighting), the technical solution must include the regulation of road lighting, metering, supervision and operation.

10.2.2. Power supply for road lighting

Power supply shall be provided from the closest power station that is a part of the Motorway system, i.e. from the closest NN cabinet. The distribution shall be such that a single NN connection supplies the main cabinet of the road lighting, from which all other division is supplied axially. Power supply for the road lighting on pay toll passages and plateaus shall be provided from the main distribution cabinet within the structure of pay toll passage.

Power supply of tunnel lighting i.e. from dividing cabinet should be from closest substation inside of tunnel. While designing NN cabinet it is needed to reduce power so that all cabinets external lighting have possibility to power from both transformation of relating transformation station (portal or tunnel).

10.2.3. Supervision and operation

Managing road lighting means switching the lights on and off, and directing its operation regime. Supervision means the transmission of the system status signal and signals of measured values of road lighting to the Center for Traffic Maintenance and Control (COKP). The supervision (only the necessary cable infrastructure) of the road lighting shall be foreseen for the lighting of the interchanges. A workstation with the Road Lighting Supervision and Operation System is not the subject of this project.

The design document shall provide for the possibility of both distance and local operation. Cable infrastructure shall be provided only for the distance operation system. Distance operation applies only to road lighting on interchanges.
Local operation at the location of the main connector box of the interchange should enable the following:

- Selection of the operating regime – distance, from the COKP, or local
- Manual switching on and off the lights for selected local operation
- Automatic switching on and off the lights and regulation of the light flow by pre-defined (programmed) daily or weekly programmes
- Operation with the help of a measuring device for measuring lumination (luxomat)

Local operation at the location of the main connector box at the location of the pay toll passage of the lights on the pay toll passage and service facilities shall enable the following:

- Manual switching on and off the lights for local operation

- Automatic switching on and off the lights and regulation of light flow with the help of pre-defined (programmed) daily –monthly programs
- Operation with the help of a measuring device for measuring luminance (luxomat)

10.2.4. Measurement

Measuring the consumption of electricity of the road lights is not to be considered separately, and no meters should be planned specifically for road lights. Measuring will be foreseen at the medium voltage of the associated substation, and ultimately, at a single place for the whole section of the Motorway.

Distribution cabinets in charge for power supply of tunnel lighting should have digital multi-meter (power measurement, pressure, frequency, working, reactive and virtual power, measurement of electrical energy quality, clock counter, database recording, communications RS485, Modbus protocol, Ethernet).

10.3. Parts of installation of the road and tunnel lighting

Main parts of the installation are: lamps, drivers for the lamps, poles, cables, devices for supply, distribution, regulation and operation.

10.3.1. Posts

Road light posts should be made of steel, protected from corrosion by hot-dip galvanization. Structural details of the posts should provide the inlet for the lights, adapter for installation of the light, opening of the connector of the post, base plate of the post, and foundation of the post with installed zinc-coated (galvanized) anchor by bolts and installation pipes for cables.

10.3.2. Lights

The lights shall be made in LED technology, and their structural characteristics shall be such to render them resistant to the environmental conditions, mechanical load of wind, resistant to corrosion, dust, humidity, vibration, temperature, and they must possess good thermal characteristics to secure good cooling of the driver and all other parts. The level of mechanical protection shall be at least IP55. In terms of maintenance, the lights shall be simple to install, with minimal use of tools.

Driver – operational devices have to be accessible, qualitative and long lasting duration
It can be integrated in the lighting or divided in separate box.
Configurable external power in band of 200 mA to 700 mA
Range of temperature -40 ºC to 80ºC
Nominal incoming power 120V – 277V
Force factor > 0,9
Duration minimum 50000 hr
Total harmonic distortion < 20%
Pre- power protection complied with directive IEEE / ANSI C62.41.2 Transient Surge Requirements

Lighting flux diodes

Sustain 90% of nominal lighting flux after 5 years (45.000 hours) and 80% after 10 years (90.000 hours) by ambient temperature of -5oC to +28oC

10.3.3. Cables

Power supply and signalization cables may be made of copper or aluminum with PVC insulation. When selecting the cables, special consideration should be given to market prices and the economically best solution shall be selected.
For the purposes of supervision and operation, lying of signal cables should be foreseen that need to be armored to reduce the effect on the environment.

10.3.4. Connector boxes

Devices for supply and distribution shall be made as self-standing cabinets for outdoor installation with at least IP 55 level of mechanical protection, and they must possess appropriate structural characteristics for the environmental and operation conditions.

10.3.5. Distributors

Distribution cabinets for power and operation of tunnel lighting should be located in tunnel electro niche, constructed with high level of mechanical protection at least IP54, and must have relevant constructive ability complied with environmental condition and drive conditions. Besides connector charged by network distribution cabinets should have connectors charged by devices for uninterruptible power supply (UPS), where one of the lighting part would be charged in case of disappearance of network power.

10.4. Visual leading

The solution also needs to take into consideration the issue of visual leading that provides to the driver a picture of the road flow and its direction. It is achieved by installing appropriate row of posts and sources of light based on recommendations from experience.

10.5. Environmental considerations

The solution should be considered in terms of reduced pollution by artificial lighting that may cause disruption of natural biological cycles and pollution of environment with artificial light. To the rational extent, optimize solutions on the basis of following principles: level of light must be sufficient to allow for uninterrupted function, but not in excess of real needs; only the areas where the lighting is really necessary should be illuminated. Those guidelines should not lower the safety level. In addition, the use of lights that dissipate the light unnecessarily is typically ineffective in terms of energy use – the consumption of electricity is unnecessarily high, consequently leading to higher costs and negative impact on environment.

10.6 Design documents

The Design should be developed to the level of Detailed Design, and it must contain construction, electrical and possibly mechanical designs.

Construction design must contain, in addition to the drawings – plans of the construction, also the drawings of cross-sections of road surfaces with foundations and poles of the lights.

Electric design should include: technical description, program of control and quality assurance, calculations, bill of costs of materials and works, drawings: plan of traffic surfaces

with directions of cables, cross-sections of trenches for cables, light poles and devices, a clear scheme, electric scheme of main and auxiliary power circles, diagram or table of time sequence of operations (for example, for automatic regulation), algorithm of the operation of the automatic device.

10.7. Deviations from the terms of reference

The designer may propose to the Contracting Authority some changes of the Terms of Reference, and deviate from the given values only with the Contracting Authority's approval. The proposed changes should contain expert explanation and justification of the change.

11. INSTRUCTIONS FOR THE DESIGN AND INSTALLATION OF LOW VOLTAGE SYSTEMS

11.1. Instructions for designing low voltage systems

11.1.1. Instructions for design of low voltage systems

Within the building, it is necessary to plan a space for placing information and communication technology (ITC) infrastructure:

Plan a room (system room) for placing the IT and communication equipment. This room shall be designed in accordance with recommendations and standards for placing ITC equipment, with suspended ceiling and higher floor, appropriately ventilated and air-conditioned, fire protection applicable for fire extinguishing in radio communication system, supervision system and access control, and separate power supply system in a separate air-conditioned room. A redundant system for air conditioning and uninterrupted power supply needs to be planned, as well as a connection to the diesel generator.

The system room needs to have open communication with the existing ITC infrastructure of the motorways and with the public telecommunication network of the telecommunication services provider.

For reasons of safety and practicality, it is not recommended to locate the room in the basement (length of the cable to the end users, floods, etc.) or on the ground flood (length of the cables, security considerations); instead, it should be located in the middle part of the building.

Individual systems should be installed with due consideration of the following recommendations:

11.1.2. Structural cabling

Installation of the ITC network shall be done by structural cabling FTP or SFTP of at least category 7. FTP cables shall be installed on the installation grooves or specially prepared cable channels. FTP cables shall end in the rooms with connectors RJ45 and on the panel of stackable ITC cabinet of minimal dimensions 2000x1000x600 and standard EIA 42U with perforated front and back door. It is recommended not to lean the cabinets against walls and instead put them at the central space of the room, so that one may go around them. Cable channels that lead to the communication cabinets should enter from the bottom part of the raised floor.

The number of connection points is 6xRJ 45 per work station.

In each logically separate wing of the building, and in each physically separate building that needs to communicate with the system room, there must be a wall–mounted communication cabinet of at least 12U height, with four multimodal optic fibre outlets, and four FTP cable outlets (where the conditions at the site allow for that in compliance with the TIA/EIA-568 standard). Each cabinet must be supplied with power from the central UPS. All cabinets should be used for possible addition of communication equipment in the form of the DECT antennas, WiFi APs, etc.

All multi-modal fibers for cross-connections of the cabinets must terminate with the other side in the main FO communication cabinet of the server room, together with all SM fibres from the main FO route and all other FO fibers for any other subsystem supervised by the COKP.

11.1.3. Network infrastructure

All network infrastructure shall be done using advanced switching technologies, so that different services would be allowed to use different VLANs (special VLAN for telephony, video surveillance, Internet…)

VLAN trunks should be realized using FO local and MAN infrastructure.

11.1.4. Telephony

All telephony should be VoIP based. For structural cabling use should be made of structural cabling of telephone network, having in mind the recommendation to realize the VoIP on separate VLAN. Telephone switchboard should be placed in a communication cabinet as a rack device. Circumstances permitting, installation of local switchboards should be avoided; instead, use of remote switching exclusively VoIP should be encouraged (e.g. IP Cenrex etc.)

11.1.5. Video surveillance

Video surveillance system shall be done using modern digital systems. Encourage use of PoE IP cameras, and if for realistic reasons the use of IP cameras is not possible, an appropriate reserve of FTB cables must be planned for possible upgrade at a later time. All FTP and possibly Coax cables of surveillance should end at a panel within the system room. In the same communication cabinet the rackable DVR should also be placed, and all other communication and monitoring thereof must be done by network infrastructure i.e. separate LAN designated to surveillance, as well as communication of all IP cameras in the system.

11.1.6. Servers and server platform

All server systems need to be designed to maximize their reliability and accessibility. Attention should be duly paid to the use and consolidation of resources. Where possible, it is advised to use Blade chassis for servers, as well as separate data servers in the form of Storage NAS and SAN servers. Plans should be made for virtualization of server resources with the aim of reducing costs and facilitating maintenance.

All communications of server platform need to be redundant with communication infrastructure.

11.1.7. Other communication and sensory equipment

Any other systems, such as radio systems, various sensory and telemetric systems, also need to be put in the system room cabinets, logically by their function and interface they need to use.

12. INSTRUCTIONS FOR THE DESIGN AND CONSTRUCTION OF ROADS IN TUNNELS

Introduction

The requirements the road pavement in tunnels needs to meet are essentially the same as for the road pavement in general. It should be:

- Safe
- Comfortable
- Durable
- Cost effective

In the text below, we shall make a comparative analysis of the main requirements for concrete pavement and asphalt pavement.

12.1 Skidding resistance of pavement structure

The friction coefficient for materials rubber-asphalt is 0.6-0.85, and for rubber-concrete it is 0.5-0.80. That shows that adhesion of rubber to the surface is relatively even for both concrete and asphalt surfaces. Significant difference cannot be observed even in wet conditions.

In longer tunnels, because of larger quantities of dust and grease on the pavement, which would be washed down by rain or blown by wind on an open road, the surface roughness is lost at a faster pace, and consequently the skidding resistance is reduced. Advantage of asphalt over concrete is that it allows for easy and inexpensive removal of the upper surface and its replacement with a new wearing course. In case of concrete pavement, the whole pavement would have to be reconstructed because it is not possible to remove and then pour anew the upper layer of the pavement. In this case, the costs of the removal and new construction would by far exceed the costs of replacing the wearing course.

12.2. Visual consideration, colour and contrast

Regarding colour, some small advantage can be attributed to concrete pavement as it is lighter. The reflection of light from the road surface affects the overall illumination of the tunnel. Since the concrete pavement is lighter in colour, the equal level of illumination of the tunnel may be achieved with less light than in case of a surface that poorly reflects the light, and as a consequence, it provides for some savings in the consumption of electricity. However, it has to be mentioned here that one can now achieve lighter colour of asphalt pavement by adding lighter aggregate and some additives to the mixture.
From the aspect of safety, visibility and perception in the tunnel, better results are achieved with higher contrast between the tunnel pavement, tunnel wall and horizontal signalization. Horizontal signalization is made with fluorescent or very strong colours for the very purpose of emphasizing the contrast and improving the visibility of adjacent moving objects. In this regard, a darker pavement performs better than the lighter one.

12.3. Longitudinal and transversal evenness of pavement

Evenness of the top layer is the difference between the designed and finished state. The evenness of the finished layer of the pavement is measured by a 4-m-long bar. According to the applicable Guidelines, allowed deviation is 4mm per 4 m in both longitudinal and transversal directions.
Based on the consideration of technology proposed by the contractor, it has been found that it is possible to meet very strict requirements of the Guidelines regarding longitudinal and transversal evenness of the pavement for both materials.

The main difference between asphalt and concrete is to be found in the rigidity of the structure and necessity to have construction joints when making them. Both elements significantly contribute or hinder the required condition of the road pavement.

In case of a frequent need to have construction joints (in case of concrete pavement at every 5.5 m), in case of an error or premature uncontrolled cracking of the pavement, due to continual dynamic shocks by cars, one side may sink against another, thus increasing the chance of non-compliance with the strict conditions set by the Guidelines. All this negatively affects the comfort of driving and may increase the chances of road accident.
On the other hand, it is well known that with purpose of constant implementation in warm condition there is no construction joints as in case of concrete road.

12.4. Influence of noise reduction

The current technology of road vehicles is so much advanced that the predominant source of noise is actually the contact between the car tire and road surface. Experience shows that pavements with higher percentage of hollow pockets and small-sized materials are acoustically better than the traditional asphalt or concrete.

The main difference between the concrete and asphalt pavement is its rigidity. Concrete is characterized by exceptional hardness and non-flexibility, while the asphalt pavement may be considered a flexible structure. Another very important difference is the necessity of construction joints. The effect of increasing or reducing noise depends a great deal on the quality of type and quality of performance of the final surface.

In case of concrete pavement, the high rigidity of the pavement increases vibrations, and consequently the noise. If we add the joints to the picture, where every 0.3 seconds (for the speed of 100 km/h) we have a dynamic shock, it is clear that the noise produced by driving is very significant.

On the other hand, the wearing course of the asphalt layer is SMA, which is actually bituminized material characterized by large share of crashed rough aggregate that intermingles and produces a load carrying grid (“skeleton”) stone-on-stone. The role of this skeleton is to carry the load and to produce high resistance to lasting deformation. The space between large pieces of aggregates is filled with bitumen matrix with polymer fibres that provide for durability and longevity of the asphalt pavement.

The principal difference between the SMA and other traditional asphalts is the lack of the medium fraction of aggregate, what ultimately produces more hollows in aggregate structure, and the structure is rougher.

An advantage of the SMA asphalt is that it provides for excellent driving conditions (evenness, skidding resistance), high resistance to lasting deformation and cracking, as well as the influence of noise reduction. Compared to ordinary asphalts, one may expect noise reduction of up to 3 dB.
There are technologies that may produce harsher surface of the concrete pavement in order to reduce the noise; however, the use of this technology results in reduced skidding resistance and it is not recommended for high speed roads.

12.5. Fire resistance and its effect on the pavement

According to the technical description of the Tunnel Project, the main reason for choosing concrete pavement is protection against fire. Large fires in tunnels that took place between 1999 2005 initiated a series of discussions on fire protection in tunnels setting in motion a number of studies of the influence of pavement on the fire intensity.

The official position of the PIARC published in the report „Fire and Smoke Control in Road Tunnels“, which is based on a large volume of research papers and studies on the influence of road pavement on fire intensity, is that: **“Standard asphalt pavements do not have significant negative influence on safety in case of fire and may be used in tunnels.”** All of the studies clearly show that asphalt, as material of choice for road pavement, does not contribute significantly to the size of the fire (amount of heat released, or total fire load) in case of tunnel fires. This particularly applies to the first stage of the fire, when the tunnel is evacuated.

Each study also brings some individual views of this problem. Here below we list the studies and their conclusions:

- „Performance of pavements in asphalt and concrete in tunnels, particularly in case of fire“ Germany – There is no reason why Germany should adopt Austrian decision not to use asphalt pavements in new tunnels longer than 1000 m.
- „Sustainable and Advanced Materials for Road Infrastructure: Review on Reaction to Fire of Pavements Materials “ Samaris - Examining and investigating incidents does not suggest that choice of materials for road pavement may additionally increase the risk of fires, even in case of catastrophic fires, as well exemplified in the case of fire in the tunnel St. Gothard.
- „Fire behavior of asphalt pavement in case of road tunnel fire“ France - in case of fire in the Mont Blanc tunnel, and based on temperatures estimated during investigations, the asphalt pavement had not been the cause of fire spreading.
- „Fire performance of road tunnels“ France – As a general rule, recommended is the use of non-combustible materials for the ceiling, and low-combustibility materials for side walls, and no recommendation is given with regards to materials for pavement. It is also recommended to pay special attention to the possibility of existence of sub-pavement galleries.
- „Brief Introduction to Tunnel Pavements Technologies“ China – There is a possibility of coating the concrete or asphalt pavement with epoxy coat in order to, among other things, achieve characteristics of non-combustible material.
- „Fire performance of asphalt concrete“ France – Bitumen-based pavement is not easily flammable and it would take a significant exposure to heat to cause self-ignition. It is likely that such level of exposure may exist only in the vicinity of a vehicle that is already in fire. Research results suggest that in case of ignition of the bitumen layer, only the top coat is burning because the “inner crust” forms on the surface of the remnants of burned bitumen. Quantity of measured fire flow is very low compared to the one in case of a burning vehicle. Quantity of emitted gasses and temperature of burning asphalt seems not to be such that could significantly worsen the situation for users during evacuation.

12.6. Pavement maintenance and cost of construction

Maintenance costs of the excising roads are a daily burden on the budget placing new demands from it. For that reason, it is of essential importance to create preconditions for as cost-effective maintenance of road pavement as possible by proper choice of technologies, technical solutions and materials.

Depending on the type of damage on the concrete pavement (cracks, worn joints, wear and tear, damage, deterioration), the appropriate repair method should be used, although the repair methods do not improve quality of the pavement, they may extend the life of the pavement.

The issue with spot-repairs of the pavement in whole depth, in case of non-reinforced pavements (as is the case foreseen here) is the formation of construction joints where they are not planned, which would allow for the possibility of one part of the pavement to sink, which may compromise road safety.

Partial repairs up to one third of the pavement thickness are done in the areas of construction joints or repairing the edges of concrete pavement. In case that the damage goes deeper than 1/3 of the thickness, it should be repaired in the whole depth.

Materials used for such repairs are characterized by high density, extremely high hardness, and very limited shrinking, or are based on epoxy resins and special cements. Because of special requirements they have to meet, the quality of materials used for repairs must be high, and so must be their price.

Evening of the top surface of the road poses a special problem because of high traffic load and wear that lead to reduced skid resistance. At present, there is no cost effective method available to overcome this problem as it is not possible to achieve sufficient quality of connection between the thin layer of new concrete and the already existing concrete structure. Another problem is the rigidity of concrete itself, which in thin layers may easily crack. So a general recommendation is given that the whole pavement structure should be completely reconstructed every 15-20 years.

Another important thing to mention is that there are no firms with relevant experience in the region when it comes to the construction and maintenance of concrete roads; this makes the costs of maintaining the road pavement significantly higher.

On the other hand, advantage of asphalt pavement is seen in its flexibility for maintenance and repairs. In case of local repairs, a very good connection between the new and old asphalt may be achieved by the use of common technologies and materials, what significantly reduces the maintenance costs. The estimated duration of asphalt road pavement is 7-10 years, upon expiration of which, it is recommended, the wearing layer of the asphalt should be replaced

One additional advantage of asphalt becomes apparent during the winter maintenance. Although the largest part of the tunnel pavement is protected from snow, some salt will be spread at the entry part to prevent formation of ice. Contrary to asphalt, concrete is sensitive

to salts and its top surface may deteriorate rapidly thus exposing the road surface to negative effects of frost and reducing the overall durability of the road pavement.

The estimated value of the works for concrete works, as well as for the asphalt works, was obtained on the basis of official bids submitted by contractors. Unit price for concrete roads is 28.32 EUR, while for asphalt roads it is 21.40 EUR. The difference in price is 30% to the benefit of asphalt road. Taking into consideration the total quantity of asphalt needed for the whole tunnel, estimated savings would be around 400,000 EUR.

It is very important to underline that neither in BiH nor in the region there exists a company that has experience with the maintenance, repair and construction of concrete roads as this technology has not been applied here over the past decades. For that reason, it is impossible to provide accurate estimates of the costs of maintenance works on annual level; however, based on available studies conducted in Europe and America, maintenance costs are lower in case of asphalt pavement.

12.7. Evaluation of comparative criteria

In cases when we have several criteria to consider when making a decision, and such criteria may often be contradictory, it is advisable to use a method of decision making on the basis of multi-criteria analysis. In order to better understand the issue and provide assistance in decision making, here is shown a Table with the Criteria Description and next to it the colour that signifies how well a specific criterion is met by the considered surface; this should provide a good visual illustration of suitability of the given type of construction for use in tunnels, as well as the suitability for specific requirements the road surface is expected to meet. Green colour is a positive aspect, red is negative. This method is an attempt to present the issue, as well as advantages and disadvantages of each individual type of road surface.

Asphalt surface						Concrete surface				
					Criteria					
					1. Skid resistance					
					2. Cost effective lighting					
					3. Contrast					
					4. Drive comfort					
					5. Reduced noise					
					6. Fire resistance					
					7. Construction price					
					8. Experience with maintenance					
					9. Cost of maintenance					
					10. Durability					

Conclusion

The above renders it clear and apparent that it is better to use asphalt pavement in tunnels than concrete; therefore, instructions are issued to all designers, supervising teams and contractors to use asphalt surfaces in tunnels, in accordance with applicable standards, and

rulebooks, for all sections that are in the stages of design stage, preparation for construction, or construction.

Asphalt construction in tunnels will be complied with composition and dimension of asphalt construction at open route, outside of tunnel, accordance with principles given in Instruction no. 14 for design and construction of asphalt construction at Motorway route.
- SMA 11s (SBM11s), + PmB 45/80-65 + Er,
- AGNS 22s, + PmB 45/80-65 + Kr,
- AGNS 32s or AGNS 22s, + B 35/50 + Kr,
- Cement stabilized layer d = 20 cm accordance with current TU requests
- NNS 0/45 mm, f5, Ev2 ≥ 120 MPa,

Minimal depth of tamponed (bearer) layer of asphalt construction is 25 cm. When tunnel construction has undershot bow that the area between asphalt construction and undershot bow is filled with filtered fill depth of 25 cm and then fill of rock mix 0/63 mm whose granulomeres composition is suitable with tamponed mix with dmax 63 mm (U=d60/d10 between 15 and 80) and contest of fine particles to 12 % m/m (category f12); whose physical mechanical characteristic satisfy criteria's prescribed for tamponed mix.
Filtered fill is after filling and profiling with slow mechanization becoming compressed not to damage drainage pipe. With filtered fill is build geotextile with flips in direction of filling first layer filling with depth to 35 cm. Filling and planning of fill material have to be done from the front how filtered fill geotextile drainage pipe wouldn't be damaged. At the first layer of fill cca 75% bearing brass should be assured, apropos minEv2 = 60 MPa. At the second layer of fill minEv2 = 80 MPa total bearing brass should be assured. Quality of tamponed mix as well as derived bearing layer has to totally fulfill current technical condition criteria especially emphasize bearing aspect (Ev2 ≥ 120 MPa) as well as frost resistance, i.e. limited involvement of small particles in tamponed mix (category f5).Technical requests for some of the asphalt layers constructions are more precise defined in Instruction no.14 for projecting and executing asphalt construction at motorway route.

Drainage of lower bow

With purpose of stopping inflow of ground water out of rock mass in and on asphalt surface construction (inflow is possible with cold dilatation non armed asphalt of undershot bow i.e. directly out of rock mass in case that tunnel is driven out of undershot bow) filtered fill have to assure good penetration and possibility of bend filtered or ground water with drainage of pipes. Geotextile membrane has double function: to stop slim filtered fill with small particles and to increase bearing and stop mixing of material of fill and filtered material.
Drainage pipe of tunnel inner diameter of D150mm, perforated with upper 120o (200cm2/m´), which enables admission and transport of water in longitudinal direction of tunnel.
In case of construction of tunnel if water sources are noted in zone of lower bow, they if needed are being caped with diameter pipes D150 (or bigger if needed complied with amount of inflow) directly connected in central connector no matter if main connection pipe i.e. central drainage pit are being used (in case location is favorable). In this case, it is compulsory to assume protection from advent of return flow constructing nonreturnable vents.
Characteristic delimiter cuts of tunnel with and without lower bow are shown at the pictures 1 and 2.

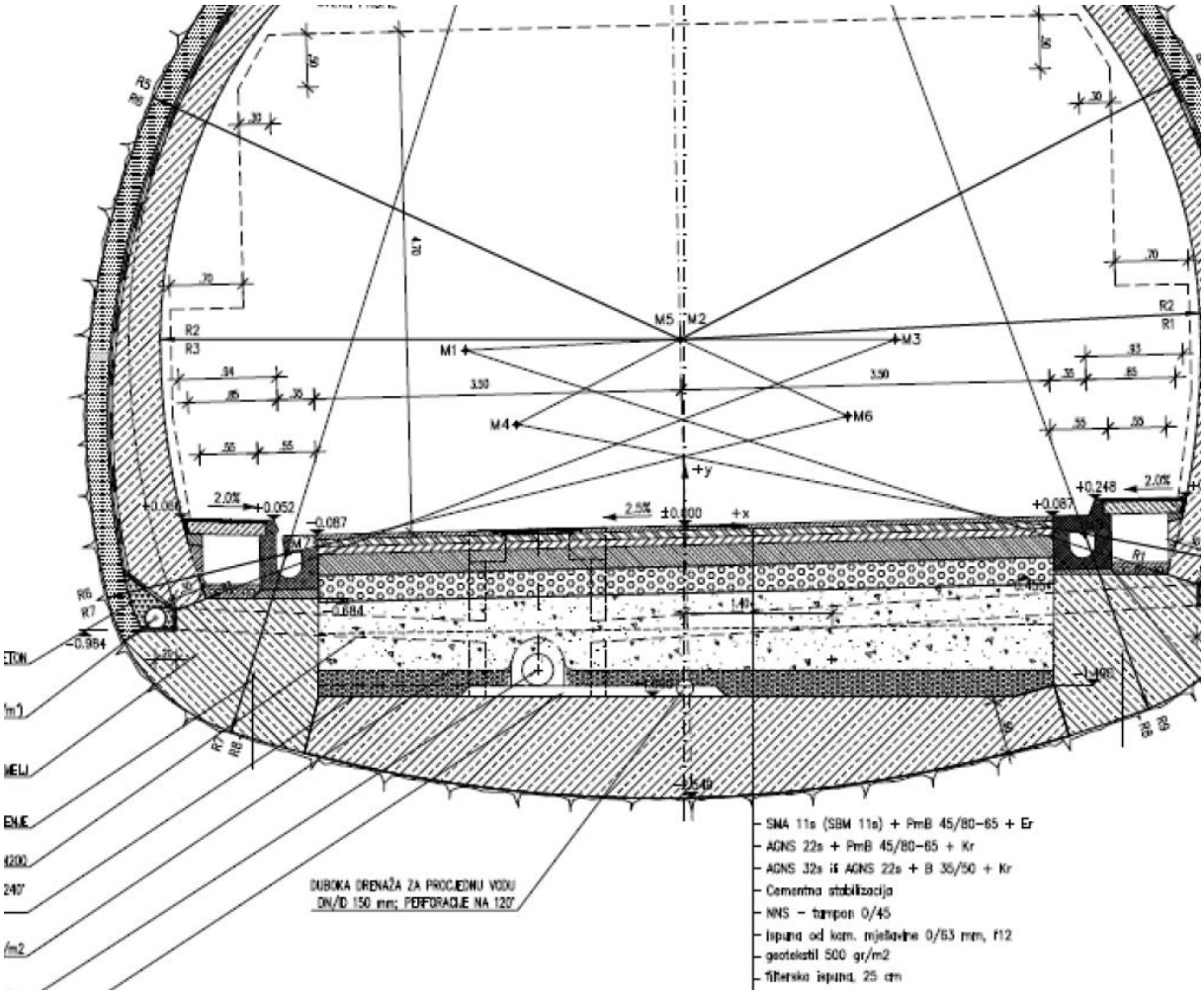
M1
M2
M3
M4
M5
M6
M7
R1
R2
R3
R5
R6
R7
R8
+y
+x
±0.000
2.5%
2.0%
+0.052
-0.087
+0.087
+0.248
-0.984
-0.684
3.50
1.40
SMA 11s (SBM 11s) + PmB 45/80-65 + Er
AGNS 22s + PmB 45/80-65 + Kr
AGNS 32s ili AGNS 22s + B 35/50 + Kr
Cementna stabilizacija
NNS - tampon 0/45
Ispuna od kam. mješavine 0/63 mm, f12
geotekstil 500 gr/m2
filterska ispuna, 25 cm
DUBOKA DRENAŽA ZA PROCJEDNU VODU
DN/D 150 mm; PERFORACIJE NA 120°

Picture 1

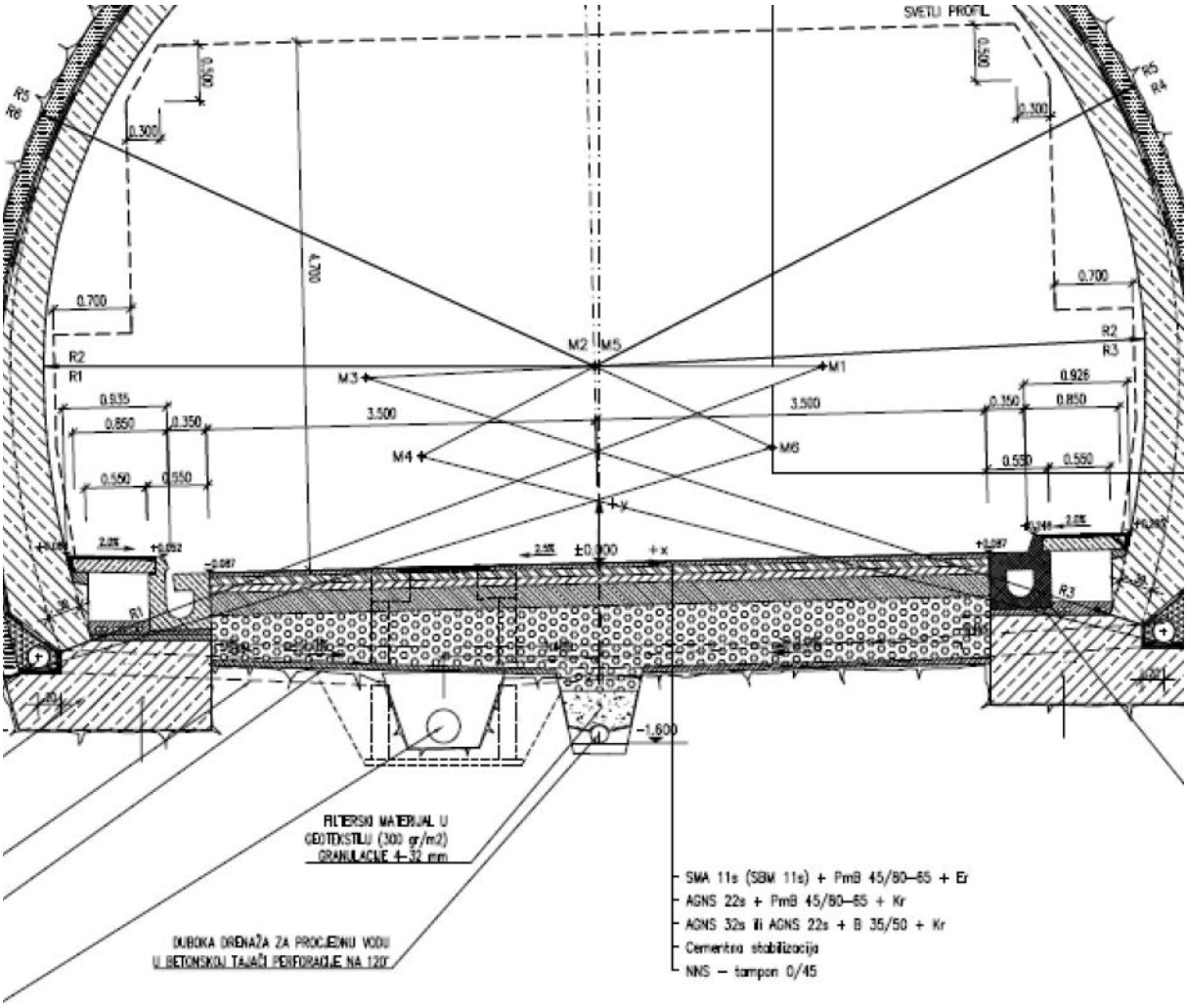
SVETLI PROFIL
FILTERSKI MATERIJAL U
GEOTEKSTILU (300 gr/m2)
GRANULACIJE 4-32 mm
DUBOKA DRENAŽA ZA PROCJEDNU VODU
U BETONSKOJ TAJAČI PERFORACIJE NA 120°
SMA 11s (SBM 11s) + PmB 45/80-65 + Er
AGNS 22s + PmB 45/80-65 + Kr
AGNS 32s ili AGNS 22s + B 35/50 + Kr
Cementna stabilizacija
NNS - tampon 0/45

Picture 2

13. INSTRUCTIONS FOR THE DESIGN AND CONSTRUCTION OF ROAD STRUCTURES ON THE MOTORWAY

Introduction

At this organizational level of the JP Autoceste FBiH, a need has occurred to harmonize design solutions for different elements of the motorway. The intention is to harmonize design solutions for all significant elements of the motorway: geometry elements, geo-technical structures, bridges, passageways, road structure, drainage, tunnels, equipment and all other elements so as to avoid unnecessary and excessive variety of the road.

The subject of the first harmonization of design solutions is the road structure of the motorway. Wishing to take advantage of previous experience, knowledge, difficulties and benefits of all participants in the construction, from design, to revision, to construction and quality control of completed works, the JP Autoceste FBiH sent a letter on June 30, 2012 to all known and relevant addresses to submit proposals, suggestions and comments concerning the solutions of road structures designed and constructed to date, as well as those under construction.

Based on the information thus gathered, as well as available knowledge and skills, what follows here provides the framework for solutions of road structures on motorways in FBiH that may not be departed from without the consent of the JP Autoceste.

13.1 Framework for unified road structure of the main motorway route

13.1.1. Composition and types of layers on the main motorway route (traffic and overtaking lanes)

A. SMA 11s (SBM11s) d = 3,5 do 4,5 cm, + PmB 45/80-65 + Er,
B. AGNS 22s, d = as calculated, but not less than 7 cm, + PmB 45/80-65 + Kr,
C. AGNS 32s, d = as calculated, but not less than 9 cm + B 35/50 + Kr,[1]
D. Cement stabilized layer, d = 20 cm in accordance with requirements of the applicable guidelines for design, construction, maintenance and supervision of roads (TU)
E. NNS 0/45 mm, d = 20 do 30cm, f_5, Ms ≥ 100 MPa, or Ev_2 ≥ 120 MPa,
F. Road base Ms ≥ 60 MPa, or Ev_2 ≥ 80 MPa,

<u>Explanation:</u>

A. SMA (SBM) discontinued mixture made on the basis of igneous aggregates of required physical, mechanical and volumetric properties, as prescribed in applicable guidelines for the design, construction, maintenance and supervision of roads. Preparation of the sample, testing, evaluation of results and quality assessment of different layers to be done in accordance with requirements of the applicable TU.[2] In case that design foresees mixtures that are not provided in the applicable TU, the quality requirements of the mixture: granulometry, physical and mechanical and volumetric properties shall be determined in accordance with original documents (OTU or other) they had been taken from, but the valuation and calculation mechanisms shall be done in accordance with the applicable TU – Guidelines. Use

[1] When calculation gained total thickness of bituminizing base course does not exceed 16 cm, then the mixture with dmax=22mm will be applied
[2] Guidelines for design, construction, maintenance and control on the roads

of stabilizing binder and polymer modified binder is mandatory, subject to local climate. Technological thickness for the mixture with d_{max} 11mm, according to our TU, for this layer are 3 to 5 cm; however, based on experience, recommended thickness range from 3.5 to 4.5 cm, without going into extreme values.

B. Top course with d_{max} 22 mm, of thickness no less than 7 cm, and thicker if so required due to traffic load. Designed and made on the basis of carbonate-limestone aggregate and polymer modified binder, subject to climate conditions. Preparation of samples, testing, evaluation of test results and quality assessment of the layer to be done in accordance with requirements of applicable TU, for the class of extremely heavy traffic load. In case that design foresees mixtures that are not provided in the applicable TU, the quality requirements of the mixture: granulometry, physical and mechanical and volumetric properties shall be determined in accordance with original documents (OTU or JUS standards) they had been taken from, but the valuation and calculation mechanisms shall be done in accordance with the applicable TU – Guidelines.

C. Top course with d_{max} 32 mm, of thickness as calculated, depending on traffic load, but not less than 9 cm. When the asphalt layers are installed on top of a layer stabilized by cement, or the section is closer to the southern part of the corridor, use of a harder bitumen binder B 35-50 is mandatory. Preparation of samples, testing, evaluation of test results and quality assessment of the layer to be done in accordance with requirements of applicable TU, for the class of extremely heavy traffic load. In case that design foresees mixtures that are not provided in the applicable TU, the quality requirements of the mixture: granulometry, physical and mechanical and volumetric properties shall be determined in accordance with original documents (OTU or JUS standards) they had been taken from, but the valuation and calculation mechanisms shall be done in accordance with the applicable TU – Guidelines.

D. Cement-stabilized layer is recommended as an integral part of the road structure, except when special conditions prove it as an unnecessary part of the road structure, and with the approval of the JP Autoceste it may be omitted. The thickness of this layer, for the reason of easy installation and compatibility, should not exceed 20 cm, but it should neither be less than 15 cm. For the purpose of preliminary testing, when establishing the mixing ratios of composites of cement stabilization, as well as for the needs of producing and installing the course, use the compacting energy in accordance with requirements of BAS EN 13286-2 of 2,70 MJ/m^3. Quality and properties of the aggregate mixture for design, production and installation of the cement stabilizing course should fully comply with requirements applicable TU for NNS mixtures of granulometry (size) 0/45. The cement stabilized course must be made by appropriate devices, depending on applied technology, that shall produce homogenous course of prescribed geometric and carrying properties. When producing the mixture in a central plant, installation must be done using suitable spreaders that shall ensure homogeneity of the spread course. All requirements with respect to physical-mechanical, carrying and geometric properties must be complied with, and all prescribed measures of care for the fresh layer must be applied.

E. Loose base layer (NNS) of the road structure to be made in accordance with specifications from the applicable TU concerning the mixture declared as 0/45, calculation and technological thickness. Construction of the loose base layer in the thickness exceeding 30 cm is not recommended, and if thicker layer is designed, it should be made in two layers, or the technology used must prove even compactness in full thickness of the layer. When placing the layer, all requirements for optimal humidity of the aggregate mixtures must be met, within prescribed limits of ±2%. Physical and mechanical properties of the aggregate mixture to be used for making the NNS must comply with the requirements of the applicable TU, with special restrictions concerning the content of small particles (particles under 0.063 mm) max category f_5 without the option of such values reaching category f_8 at installation. 10% of the results may show excess of 10%, or max 6%m/m. The content of dusty component (particles less than 0.02 mm) up to max 3%m/m. All other requirements concerning physical-mechanical properties and volumetric properties prescribed in applicable TU are valid.

F. Wherever possible, and when the quality of materials used at the base level permits, ensure as high as possible carrying capacity by applying standard technological processes and materials designated for making the base layer. The smallest carrying capacity of the base is limited to E_{v2} = 80 MPa, E_{dyn} = 40 MPa or M_s = 50 MPa. In up to 10% of total number of measurements the above value may be 85% of the prescribed value. With regards to small particles, the applicable TU shall apply, defined depending on Hazen coefficient of unevenness and local hydrology.

13.1.2 Composition and types of the courses at the main route of the motorway – emergency lane

A. BB11 k (AB 11), d = same as thickness of the wearing layer HS of the main route, B 50/70, with parameters for medium traffic load,
B. AGNS 22A, (BNS 22), d = as thickness of the top layer (VS) or upper binding carrying layer (BNS) of the traffic lane, B 50/70, with parameters for medium traffic load,
C. NNS 0/45 mm, d = in accordance with the overall thickness of the road pavement (KK) on the main route, f_5, Ms ≥ 100 MPa, or Ev_2 ≥ 120 MPa,
D. Base width Ms ≥ 60 MPa, or Ev_2 ≥ 80 MPa,

<u>Explanation</u>

All instructions given for different layers and materials on traffic and overtaking lanes of the main route apply here too, with the exception concerning parameters of designed, produced and performed layers that must be in accordance with traffic load – medium traffic load. Technological thickness of the wearing and carrying asphalt layers must comply with the designed thicknesses of appropriate layers of the traffic lane they are in contact with.

14. INSTRUCTIONS FOR PLANNING AND CARRYING OUT ASPHALT WORKS

Introduction

Asphalt is a product the main characteristic of which – its ability to be placed – is provided by its binding material – the bitumen. The workability of bitumen, with respect to the bitumen type, depends on temperature, so depending on the type of bitumen binder used the minimum and optimum temperatures for installation of bitumen mixtures have been prescribed. Table 3.39 of the current TU that follows shows recommended temperature ranges for bitumen mixtures depending on the type of bitumen binder used.

Table 3.39: Recommended and highest temperatures of the produced bitumen concrete mixture

Tabela 3.39: Preporučena i najveća temperatura proizvedene smjese bitumenskog betona

Tip bitumena	Priporučeno područje temperature °C	Najviša temperatura °C
B 160/200	130 do 150	165
B 100/150	135 do 155	170
B 70/100	140 do 160	175
B 50/70	150do 170	180
B 35/50	160 do 180	190
B 20/30	170 do 190	195

In addition, it is very important to ensure good adhesion between the asphalt course and its sub-layer, and good adhesion between two asphalt courses. Only pavements where all layers adhere well to each other during operation work as a structure that is capable of carrying the planned traffic load without unwanted defects. In this sense, a mandatory technological phase of “making a binding layer to bind the bituminized layers together” is done – the so- called sprinkling with bitumen emulsion.

Wet, cold and windy weather reduce the temperature of the produced mixture and have negative effect on adhesion of layers and make the proper placement of the produced asphalt mix significantly harder or impossible. In connection with this, all technical requirements, including the current TU, prescribe minimum temperatures of air and sub-layer, they proscribe work during wet weather, prescribe conditions for the transport of the produced asphalt mix that provide for optimal conditions for the placement of the bitumen mixes.

Considering that the larger part of our country has continental climate, and only southern parts have some combination of continental and Mediterranean climate, the calendar for asphalt works used to be restricted in the past too. In connection with this, the JP Autoceste FBiH prescribes the following:

14.1. Calendar framework for planning and carrying out asphalt works on motorways

For planning and carrying out asphalt works on motorways, the Contractors for asphalt works are instructed to focus on the period from April 15 to October 15.

The works prepared for performance before April 15, in case that conditions in terms of temperatures of air and base have been met, as well as the ongoing works that exceed the foreseen deadline of October 15, while the air and base temperature conditions are still satisfied, may be carried out subject to a special approval of the Engineer.

All contractors and their suppliers of materials and sub-contractors are advised to use the time between October 15 and April 15 to make proper preparations, such as developing their quarries, conducting overhaul and repair of machinery and plants, obtaining permits, testing and making preliminary laboratory composites and preparing supporting documentation, such as technical studies etc., in order to be ready for the asphalt work season when it starts.

With respect to already contracted works, these Instructions shall be implemented in the way that all requirements prescribed by the current technical conditions, such as air temperature, base temperature, windy weather, wet weather etc., as well as other responsibilities that are approved by the Engineer are met.

15. INSTRUCTION FOR APPROVING MATERIAL- FRACTIONED AGGREGATES

Introduction

The Law on Construction Materials and the Rulebooks based on that Law or other legal grounds, which concern the procedures of issuing certificates and other documents defining quality, prescribe conditions and procedures for the control of production and issuance of certificates for construction products (including fractioned aggregates and other quarry products).
Due to numerous shortcomings of systemic nature (laws exist, but there are no mechanisms to ensure their consistent implementation, there are not enough licensed legal persons, etc.), the manufacturers of quarry products perform their obligations in terms of adequate production control and quality assurance with varying levels of consistency and seriousness. In order to avoid the application of different standards in making decisions when approving the sources and quarry products: fractionated aggregates for asphalt and concrete, a mixture of the NNS, VDNS and others, JP Autoceste FBiH in this document define the minimum requirements for manufacturers of quarry products.

15.1. Minimum requirements for producers of fractioned aggregates

All producers of quarry materials that have not obtained product compliance certificates for their products for their intended purpose (use in asphalt, concrete mixtures for NNS, VDNS) in accordance with the Law on Construction Products and its accompanying rulebooks, until they obtain this certificate, must as a minimum provide the following:

- General documents: registration certificate of the company, activity, concession contract, environmental permit and any other documents proving the legality of their business,
- Appropriateness of the main resource (the rock) for the production of quarry products proven by relevant tests (tests by the JUS standards as taken over are acceptable), in accordance with the intended purpose, issued by authorized or trained and appropriately equipped national bodies.[3]
- Tests of the main raw material and assessment of its appropriateness is based on at least three aspects: physical and mechanical properties of the material in relation to its intended purpose, mineral and petrography composition, with assessment of its suitability for intended purpose, and chemical analysis, with the emphasis on content of harmful or prohibited substances in relation to the intended purpose of the material.
- Product suitability: of fractioned aggregates or aggregate mixture proven by adequate testing (for NNS and VDNS in accordance with BAS EN 13242; for concrete BAS EN 12620 and for asphalt in accordance with BAS EN 13043), depending on its intended purpose, issued by licensed or trained and appropriately equipped national bodies. The assessment, opinion on usability or suitability of the product must be based,

[3] ''Authorized and properly equipped national bodies'' mean legal entities, which, from the aspect of equipment, knowledge and trained staff, have the capacities prescribed by Rules on conditions for entities that carry out compliance assessment activities of construction products, but for certain objective or other reasons, still do not have authorization of the relevant Ministry to conduct compliance assessment procedures and other related activities in this process, issue certificates on factory control of production or to issue certificates on compliance of the construction product.

relative to the intended use of materials, on the parameters of physical and mechanical properties of the material, its mineral and petrography analysis and chemical analysis of the product.

15.2. Assessment of acceptability of fractioned aggregates produced from dolomite rocks

Applicable TU (technical conditions), except in some rare special cases, [4]do not exclude the possibility of using fractioned aggregates obtained from hard dolomite rocks that are extracted by mining. Some of properties that render the fractioned aggregates of dolomite origin not suitable for non-selective use are:

- Content and origin of small particles,
- Content of weak and worn kernels,
- Water absorption,
- Insufficient mechanical resistance to additional crushing under the construction mechanization (LA, MD or crushability),
- Unsatisfactory value of polishing resistance (PSV for wearing course),
- Mineral and petrography and chemical suitability for use in concrete mixtures exposed to wet and aggressive environments.

Therefore, the dolomite materials are not explicitly forbidden for use in road construction; however, their usability needs to be proven by adequate testing with special consideration of their above indicated properties, all relative to the intended use of the materials.

Provided ongoing control of production with statistic indicators of quality parameters for the period of at least 6 months prior to the submission of application for use for the construction of the motorway. The acceptable level of production control is 1 + (trained staff and adequately equipped laboratory of the Manufacturer), or Agreement with an Institution that would periodically make statistical analyses on the basis of their own and manufacturer's test results (system 2+), even if the Institution has not finalized the process of obtaining the license, but the process has started.

Once the documentation review finds that these are the aggregates that by their composition belong to aggregates with potential possibilities of harmful alkali reactions in concrete, ie. siliceous aggregates, dolomites, dolomitized limestone, limestone dolomite and other aggregates by the composition belong to aggregates with potential possibility of occurrence of alkali-silicate or alkaline-dolomite reactions in concrete, it is required to perform additional testing in accordance with DIN EN 12620 and the German guideline for the prevention of harmful alkaline reactions in concrete - "Alkaline guidelines" . Terms and conducted tests of aggregates in terms of alkaline reactivity are given in Annex 1 of this instruction.

Approval for the said aggregates in terms of alkaline reactivity will be given for materials that are according to the classification of the mentioned "Alkaline guidelines" (DAfStb- Richtlinie,

[4] For wearing courses of the roads with heavy and very heavy load, exclusive use of aggregates with high polishing resistance is required- which corresponds the rocks of eruptive origin

Vorbeugende Maßnahmen gegen schädigende Alkalireaktion them Beton- Alkali Richtlinie) classified as follows:

E I - "X" - **harmless** from the aspect of alkaline reactivity "**APPROVED"**

E III - "X" - **harmful** from the aspect of alkaline reactivity "**NOT APPROVED"**

"X" - means the Mineralogical-petrographic classification affiliation E II - "X" - **conditionally usable** in terms of alkaline reactivity "**APPROVAL UNDER SPECIAL CIRCUMSTANCES"**

E II "X" classification applies only in the case of tests on alkali-silica reactivity, ie. dolomites, dolomitized limestone, dolomite limestone cannot be "approved under special conditions'. "The approval under special conditions" means the restrictions given in the certificate.
If it is estimated that the "special conditions" according to the certificate of technological or other reasons, cannot consistently be implemented, approval will not be granted for such aggregate.

15.3. Assessment of acceptability of fractioned aggregate for motorway wearing course

For the design, manufacture and installation of asphalt mixtures intended for making the wearing course of heavy and very heavy loaded roads in accordance with all technical requirements that apply to this area:
- Contract documents for construction, reconstruction and modernization of roads in the SR BiH, Volume II / 74 and Volume II / 77;
- Taken and applied JUS standard that prescribes technical requirements for wear course U.E4.014;
- OTU R of Croatia,
- Technical requirements for asphalt maintenance of pavement structures on motorways, edition of Croatian Motorways d.o.o.,
- Guidelines for the design, construction, maintenance and supervision of the roads prescribe application of fractionated aggregates with strong anti-skid properties, or fractionated aggregate that has high resistance against loss of antiskid properties.

Listed TU define the physical and mechanical properties of rocks for production of fractioned aggregates as well as physical and mechanical properties of fractionated aggregates. Almost all the listed technical requirements are in agreement and closely define criteria for the evaluation of rock and fractioned aggregate.

The need to precisely define the criteria arose from the fact that the current technical requirements, Guidelines for the design, construction, maintenance and control of the roads, compared to all the previous criteria
- move the admissibility limit when evaluating resistance to the adverse effects of frost as well as the facts that the present technical conditions
- do not define the criteria for the rock from which the fractionated aggregates are produced.

Section A) provides a review of the criteria in specific technical conditions for the evaluation of material resistance to the harmful effects of cold and in order to overcome possible concerns, the application of different standards and ensuring that the wearing course of motorway incorporates adequate materials. Section B) lays down criteria for assessment of eligibility of rocks and fractioned aggregates intended for making the motorway wearing course.
Section C) given guidance on the process of approval fractioned aggregates before the start and during the work on construction of wearing course.

A) Overview of the criteria and prescribed acceptable limits of loss of mass in the evaluation procedure with sodium sulphate

Table 1 contains criteria - acceptance limit of mass loss in the cold stability tests in the sodium sulfate (Na_2SO_4). These figures represent the weight percentage of the allowable loss after tests by the procedure described in the standard B.B8.044 after 5 alternating cycles of exposure to a chemical.

Table 1**.** Overview of the different criteria in terms of resistance to the harmful effects of frost

Technical conditions	Criteria: max. allowed mass loss for heavy traffic load % m/m
Contract documents for construction, reconstruction and modernization of roads in the SR BiH, Volume II / 77;	3
Valid JUS U.E4.014	3
OTU R of Croatia	3
Technical requirements for asphalt maintenance of pavement structures on motorways, edition of Croatian Motorways d.o.o.,	3
Guidelines for the design, construction, maintenance and supervision of the roads, BiH 2005	5

B) Particular requirements for the assessment of eligibility of rocks and fractioned aggregate for wearing course on the motorway

Tables 2 and 3 lay down specific requirements in terms of quality of rock and fractions of stone materials intended for the construction of the wearing course layer on the motorway:

Table 2. Requirements for technical stone from which fractionated aggregate is produced

Characteristic	Measuring unit	Required
Compressive strength in dry condition (min)	MPa	180
Allowed fall of compressive strength after water saturation (max)	%	20
Water absorption (max)	% m/m	0,75
Wearing through grinding (max)	cm3/50 cm2	12

Resistance to freezing 25 cycles		Resistant
Resistance to frost 5 cycles (max)	% m/m	3

Fractionated aggregates intended for production and manufacturing of wearing course on the motorway should be in accordance with BAS EN 13043 and the requirements of applicable technical conditions of Guidelines for design, construction, maintenance and control of the roads. For certain parameters special quality requirements are presribed:

Table 3. Special requirements for fractioned aggregates

Characteristic	Measuring unit	Requested
The content of grains below 0.09 mm in inter-fraction 0/2 mm or 0/4 mm in fraction	% m/m	5 (7,5)[5]
The equivalent of sand (min)	%	70
Water absorption (max)	% m/m	1,2
Content of grain of adverse forms (3:1)	% m/m	10
Resistance to frost 5 cycles (max)	% m/m	3 (3,45)[6]

C) Guidelines for the approval of materials and asphalt works on the construction of wearing course on the motorway

Before the start of asphalt works on making motorway wearing course, Contractor is obliged, in accordance with the requirements of technical conditions, to submit the necessary documentation for the approval of the Engineer (Supervisory Team) (technological study, documentation for stone, fractionated aggregate, filler, bitumen, additives, laboratory recipe, working mixtures and the like.)

In addition to the technical conditions, the required content, the Contractor for approved fractionated aggregates to be used for the production and installation into the motorway wearing course, must provide:

- Deposited frost tested amounts fractioned aggregates sufficient for 15-day installation. Verification of frost tests in accordance with B.B8.044 will be done, upon the order of Engineer, by engaging internal and / or external control.
- Newly delivered quantities upon the same principle must be duly controlled in the regular procedure by an approved program of tests or more frequently if it is required by the Quality Engineer.

[5]For more tested samples of the same fraction, up to 20% (1 of 5) samples tested can reach a value of 7.5% m / m (exceeding 50%), provided that the criteria of Sand equivalent are met.

[6]For more examined samples of the same faction, average value can be up to max 3.45% m / m (exceeding 15%) with a maximum of 20% (1 of 5) samples tested can reach a value of 3.75% m / m (exceeding 25%).

Conclusion

Nominated materials intended for the design, manufacture and installation of concrete mixes, asphalt mixes and pavement layers that do not meet the requirements of these guidelines, cannot be subject to approval on the construction sites, which are under the jurisdiction of JP Autoceste F BiH.

Annex 1.

1. The program tests and certification of aggregates in terms of alkaline reactivity

- *Program tests*

The program tests are defined according to DIN EN 12620 and the German "alkaline directive" (DAfStb- Richtlinie, Vorbeugende Maßnahmen gegen schädigende Alkalireaktion them Beton- Alkali directive).
To test alkaline reactivity of dolomite, dolomitized limestone and limestone dolomite, it is necessary in addition to examinations, according to the "alkaline directive" to make initial testing in accordance with ASTM C295 standards.

- *Certification of aggregates in terms of alkaline reactivity*

Certification involves sampling (only by authorized representatives of the institute) in the presence of representatives of JPAutoceste FBiH, the supervisory team and the contractor (manufacturer); providing transport of samples to the address of the institute, testing and certification; control of production (at least once in 6 months)
All costs incurred in the process of certification are borne by the contractor (producer).

2. Criteria for the selection of the institute, which will certify the aggregate from the aspect of alkaline reactivity

The legal entity that can certify the aspect of alkaline reactivity must meet the following criteria:
• Testing laboratories according to EN ISO / IEC 17025:
• calibration laboratories EN ISO / IEC 17025:
• Inspection Body Type A according to EN ISO / IEC 17020:
• The certification body according to EN 45011
• Accredited for testing according to European standards (EN) for tests of cement, aggregates, concrete and testing according to Alkaline directive of the German Committee for the concrete and reinforced concrete (DAfStb)
• Staff qualified for examinations of alkaline reactivity of aggregates and concrete according to Alkaline directive" of the German Committee for the concrete and reinforced concrete (DAfStb)

A legal person must be authorized by J.P. Autoceste FBiH. In addition to the application for approval, the following must be submitted:
• Documents proving the listed competences
• A statement that the testing and control of production will be carried out in accordance with the referential documents and represent the interests of JPAutoceste FBiH.
• The appointment of coordinators for the certification and control of production

16. INSTRUCTIONS FOR APPLICATION OF FIBER - REINFORCED SHOTCRETE

Introduction

Fiber-reinforced shotcrete (MMB) is the "new" material that is constantly evolving in terms of types of fiber, "modern" concrete technology and of new techniques of application of shotcrete .Micro-reinforced shotcrete (MMB) in the last ten years is accepted as an integral part of support systems in tunnel construction by architects, engineers, contractors and investors around the world.

If we analyze the properties of the concrete very soon we will conclude that the concrete by its nature is one of the brittle materials and as such used in most constructions shows various types of cracks and fissures. It is not any different with shotcrete. The reason for opening fissures or cracks in the concrete is constructive or "economic" in nature, but the fact is that the fundamental reason for cracks in concrete is non-existence (or the existence of very small) capacity of concrete tensile. Transfer of the tensile force in concrete is done exactly through "reinforcement", regardless of whether it is a reinforcement grid, rods or fibers. If further analyze the "reinforcement", we will notice that there are a number of advantages of fiber-reinforced shotcrete compared to conventionally reinforced sprayed concrete (reinforcement mesh or rod). The fiber used in shotcrete in its size is significantly smaller than the conventional reinforcement and as such are closer in size to the size of the cracks and fissures and "more effective in forming the mechanism of the transfer of tension force from concrete on the reinforcement." Another advantage is certainly the equal distribution of the concrete sections. Listed two important facts make fiber-reinforced shotcrete, a fibrous and ductile material which places it in an entirely different material than a conventional reinforced concrete .

16.1. Technical advantages of fiber-reinforced shotcrete

Mechanical properties of shotcrete are defined through the attitude of water cement ratio (w / c) or a water-cement factor supplemented by micro-silicate fillers (v / c + s), additive-type of accelerator for sprayed concrete, and spraying and care conditions of shotcrete. Main reason for applications of fiber in shotcretes is to increase ductility (toughness).

Ductility of shotcrete depends solely on the amount and type of fibers that are used .When talking about the advantages of fiber-reinforced concrete in terms of mechanical and technical characteristics, we can state the following:

- Increased impact resistance (sudden falling of rock mass)
- Increased resistance to abrasion and erosion
- Increased impermeability
- Increased freezing-resistance
- Increased adhesion to the substrate

In technical terms it is important to emphasize the following advantages of fiber-reinforced shotcrete in relation to conventional reinforced shotcrete in tunnel construction. In fact it is known that in the case of construction of the tunnel there is a sudden load and deformation of rock mass. The best possible way for ensuring a sufficient level of safety when working in the tunnel is to ensure the greatest possible level of fracture energy (ductility / toughness) of shotcrete.

By comparison, the use of "ordinary" steel fibers in shotcrete improves support system with twice the energy of fracture compared to non-reinforced shotcrete, while "modern" fibers

improve the support to 50-200 times the energy of fracture. In simplified terms, support systems with modern technology of fiber-reinforced shotcrete can suffer large cracks and deformation but still maintaining a high level of performance (post-cracking performance (ductility / toughness)).
This fact provides a timely consideration of changes and deformation of support system and leaves enough time for an adequate response without compromising the safety of the participants in the construction of the tunnel.

16.2. The types of fiber

This chapter defines:
- Types of fibers that are allowed in the support system
- Norms defining characteristics of fibers

16.2.1. Glass fibers

They are not permitted.
Glass fibers are not allowed, because after a certain period they become fragile and are being destroyed by the cement in the concrete structure.

16.2.2. Plastic fibers (plastic fibers = synthetic fibers)

Micro-synthetic fibers are not permitted as supporting fiber (non-structural). They can be used as a supplement for shotcrete in order to improve certain mechanical properties but only with the use of reinforcement. Micro -synthetic fibers contribute to the improvement of fire-resistance, reduce rebound in the wet spraying process, reduce micro-craks with plastic solidification phase, reduce shrinkage of shotcrete.
Macro synthetic fibers are permitted as a support with sizing and detection of post-cracking performance according to the standards which will be defined in the coming chapters. Additional condition for using macro synthetic fibers is having the necessary certificates and attests that will be defined in the following sections.

16.2.3. Carbon fibers

From a technical point, mechanical properties of carbon fibers are ideal for supporting systems in tunnel construction, but in practice for economic reasons (high cost) are not used.

16.2.4. Steel fibers
Steel fibers are also the most widely used fiber in shotcrete, although in practice it is often not shown as the best choice, due to a number of adverse effects during the application itself. Recently, most often they are replaced by macro-synthetic fibers.
While there are a number of different types of steel fibers on the market, it should be noted that only a few types have satisfactory characteristics for application of steel fibers in shotcrete.
The most frequent request is that the steel fibers are thin (small diameter), long and as high quality of steel as possible.
Critical and important parameters in the selection of steel fibers are:
- Geometry

- Length
- Length / thickness ratio (L / D)
- The quality of steel

16.2.5. Applicable standards

Use of the **EN 14889-1 and EN 14889-2** standards is obligatory.

16.3. Sizing-defining characteristics

Sizing-defining of characteristics (Structural design) must be carried out by authorized, qualified and experienced person (expert engineer).

16.3.1. Assumptions when sizing-defining characteristics

Sizing-defining characteristic of the fiber-reinforced shotcrete (MMB) shotcrete should be implemented taking into account the post-cracking performance (post-cracking residual strength) for various levels of deformation. The level of deformation has to be assumed for the ultimate performance.

16.3.2. Defining fiber-reinforced concrete

It is necessary to define the characteristics of the concrete-mix composition (Mix Design) i.e. characteristics of fresh concrete, hardened concrete, early strength, post-fracture capacity or energy absorption, fiber types, the durability requirements, the request to the environment, the conditions of performance, nurturing conditions, and a number of other characteristics prescribed by directive for sprayed concrete of the Austrian Association for Concrete and construction technology ‘’ÖVBB Richtlinie Spritzbeton".

16.3.3. Previous tests

The procedure of previous tests needs to be carried according to the Directive for sprayed concrete of the Austrian Association for Concrete and Construction Technology ‘ÖVBB RichtlinieSpritzbeton". Previous tests are necessary to demonstrate the defined characteristics of reinforced concrete from item 4.2.

16.3.4. Support category

The choice of supporting categories needs to be made according to the diagram based on Q-classification (Tunneling Quality Index) by Grimstad and Barton. Application of Q-system has defined a diagram through which supporting category is determined on the basis of Q-index (Diagram 1). In order to establish a connection of Q index and the necessary support of tunnels, additional parameters are defined that are called equivalent dimension of excavation, De. This dimension is obtained by dividing the range, the diameter or height of the tunnel with the size which is called the index of support ESR (excavation support ratio). ESR values are obtained empirically and given in Table 1:

$$D_e = \frac{Raspon,\ promjer\ ili\ visina\ tunela\ (m)}{ESR}$$

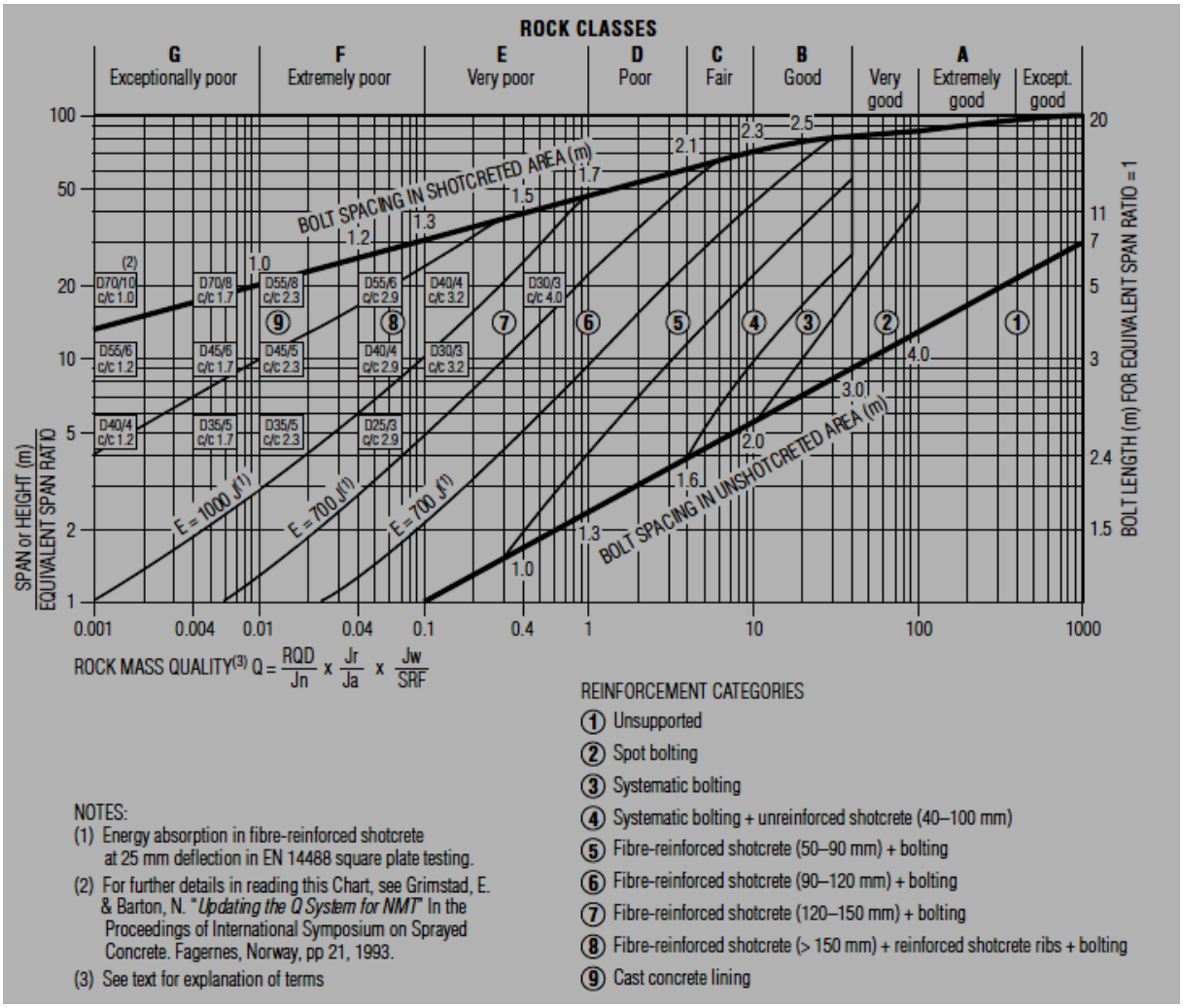

Diagram 1 Determination of support categories on the basis of the Q index

(Grimsted and Barton, 1993)

Table 1 - values of support ratio

Excavation category		ESR
A	Temporary mining openings	3-5
B	Vertical opening: • circular cross section • rectangular cross-section	 2,5 2,0
C	Fixed mining rooms, hydro-technical tunnels (not including tunnels at high pressure) pilot tunnels, tunnels with elaborate profiles of major excavations	1,6
D	Storages, water treatment facilities, less significant road and railroad tunnels, access tunnels etc.	1,3
E	Oil storages, engine rooms, main road and railroad tunnels, shelters, portals, intersections	1,0
F	Underground nuclear plants	0,8

16.3.5. Correlation between RMR and the Q-classification

If the categorization is done according to the RMR, it is possible to establish a correlation between RMR and the Q index (Tunneling Quality Index) over the following form:

$$\mathbf{RMR=9\ \log_e Q\ +44}$$

16.4. Quality control

It is necessary to create internal and external control plan (Quality Management System) according to the guideline for sprayed concrete of Austrian Association for Concrete and Construction Technology directive ‘’ÖVBB " Spritzbeton".

GUIDELINES, STANDARDS AND ANNEXES

Guidelines

1) Guidelines for sprayed concrete of the Austrian Association for Concrete and Construction Technology ÖVBB "Richtlinie Spritzbeton" (December 2009) -BASIC DOCUMENT

Standards

1) Binding are all norms of Guidelines for sprayed concrete of the Austrian Association for Concrete and Construction Technology ÖVBB Richtlinie Spritzbeton" (December 2009) -BASIC DOCUMENT given in section 15.1, 15.2, 15.3 of the said document.

Annexes

1) Guidelines for sprayed concrete of the Austrian Association for Concrete and Construction Technology ÖVBB Richtlinie " Spritzbeton" (December 2009) -BASIC DOCUMENT

17. INSTRUCTIONS ON CONVERGENCE OPTICAL MEASUREMENTS IN TUNNELS

Introduction

During the construction of the tunnel, depending on the rock mass, there is a smaller or larger deformation and displacement of the tunnel wall. To be able to predict the behavior of materials and application of the optimum system of support in which the tunnel is being built, the tunnel lining is implanted with markers or reflectors which are suitable for the optical measurement of high accuracy. After the initial measurement (ie. zero measurement), it is necessary to monitor the progress markers in relation to the initial (zero) measurement. Through measurement of markers, convergence of the points is obtained in the direction of all three axes and subsidence of tunnel walls is monitored until its calming. Concreting of the secondary lining in the tunnel is performed only after calming the tunnel walls (for 1 month convergence increment of less than 4 mm), and therefore deformation monitoring is one of the crucial things when building a tunnel.

17.1. Required documentation

Before the start of the excavation works in the tunnel Contractor must submit a detailed monitoring convergence programme which shall contain at least:
- Description of installation, fixing and protection of pins
- The entire display of phases of instruments operation: equipment for main and secondary measured sections, location of sections, distance, schedule of monitoring
- A list of personnel who will carry out the works on the measurement of convergence
- Specifications and catalogs of instruments and equipment for reading, which are intended for use
- Proof of a regular calibration / calibration of instruments
- Basic characteristics of software package for the evaluation of geotechnical measurements and reference file of original and collected data in a certain format
- References of contractors to monitor convergence,
- Form of Report of measuring deformations

All documents to be submitted are subject to the approval of the Supervisory Engineer.

17.2. Equipment needed

Surveying equipment must consist of a minimum of the following:
- Carriers (wedges) to set markers or prisms with a length of at least 50 cm
- Reflective markers for measuring lengths up to 150 m
- Or prism measurement in lengths from 150 to 500 m
- Surveying instruments, electronic theodolite with integrated coaxial distance measuring system
- A software package for data interpretation (Eupalinos - Geodata or similar)

Required accuracy of the measuring instrument for measuring the distance should be ≥ ± 1 mm. Measurements are usually carried out within the framework of an integrated monitoring system for tunnels, which also includes measurements of subsidence and check the position of cross sections of the tunnel.

17.3. Installation of control measuring profiles

Installation of control measuring profiles is done as close to the forefront of tunneling. The carrier of markers is installed in unsupported cliff if conditions permit, or after applying the first layer of shotcrete. After installing, the rappers need to be visibly marked and protected to avoid damage. Measuring profiles must be marked with chainage and number, and rappers (markers) in the profile with numbers while retaining the same number for a particular rappers position in all profiles.

Control measuring profile should contain at least 5 measuring points positioned at the edge of the underground excavation (Figure 1). The measuring point consists of a carrier of measurement point which is installed in shotcrete or rock mass and where bireflection target or prismatic target is set up.

Placing control measuring profiles is done in two stages, after excavation of calotte and after the excavation of steps. Mounting position of the control measuring profiles is to be determined by the supervising engineer during the performance.

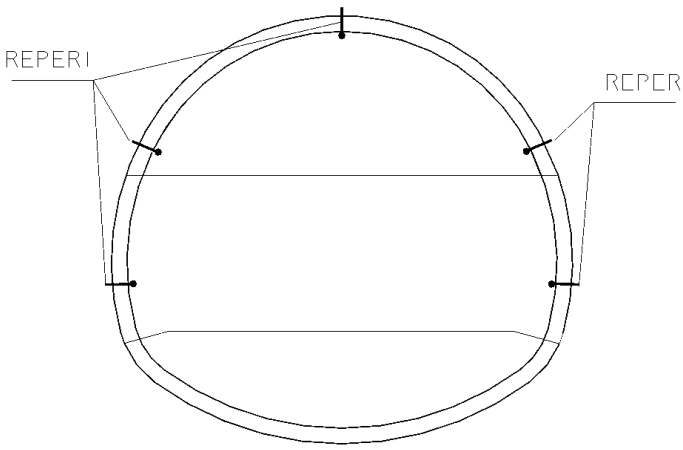

Figure 1. Control measuring profiles

For tunnels in rock mass control measuring profiles shall be set up in the zones IV and V of rock mass category. In the rock mass categories I to III , one control measuring profile will be installed on every 30-100 m of tunnel length. For tunnels in the ground, control measuring profiles shall be set up at every 10-15 m depending on the technology of performance.

In addition to design-defined measuring profiles, it is necessary to incorporate additional measuring profiles in line with changes in the local geological conditions and the experience gained during the excavation of the tunnel. Places to install additional control measuring profiles are to be determined by the supervising engineer.

17.4. The frequency of measurement

After installing the control measuring profiles it is necessary to immediately execute the zero measurement. The first measurement should be made no later than 24 hours after the

excavation. Measurements will be made till the complete cessation of movement. The frequency of measurement shall be prescribed by the supervising engineer since the movement depends not only on time but also on the process of construction, or the distance from the tunnel face to the measuring profile. The measurements need to be intensified in cases of faster growth of deformities, or occurrences that point to the instability of the underground excavation.

The frequency of performing further measurement or reading of data, in case of the standard behavior of surrounding rock mass, can be predicted for each measuring section, as follows:
- Up to 40 m behind the excavation area: daily
- 40 to 100 m behind the excavation area: every other day
- 200 m behind the excavation area: once a week
- More than 200 meters behind the area: monthly
- Clear stabilization of subsidence monthly or bimonthly

The frequency of reading data is affected by execution phases of calotte / stairs of the tunnel. If performance of the stairs is approaching section with instruments that are set at the time of construction of calotte, the frequency of reading the data must be increased again. If the parallel tunnel tube is approaching section with the instruments, which is set during the construction of the first tunnel tube, reading needs to be reactivated and accordingly the frequency of data reading increased.
The frequency is increased at any location during and after the installation of support elements or the excavation, if approved by the Supervisor.

On the sections with increased rate of deformities, reading should be performed frequently (at least once a day) until the rate of deformation decreases in time.

The measurements need to be intensified in cases of faster growth of deformities, or occurrences that point to the instability of the underground excavation. The frequency of measurement shall be prescribed by the designer with the consent of the Supervisory Engineer for tunnels.

17.5. Measurement

General requirements:
- Geotechnical Instruments and monitoring program are always subject to change, unless specified changes are required by existing geological and geotechnical conditions.
- Setting up of instruments and devices is performed near the working face during the execution of the last step of the excavation.
- Set measuring equipment and space necessary to perform measurements must always be free and easily accessible, till the setting of the waterproofing membrane.
- All instruments must be protected from damage that can be caused by blasting or traffic in the tunnel. If necessary, it is possible to use the protective covers or the housing in order to prevent damage to the instrument.
- Instruments damaged during the execution of construction activities must be immediately replaced at no extra cost.
- Units for data reading at high precision on theodolite shall be available at any time during

the construction of the tunnel. Spare parts and replacement units should be kept on the site
- The Contractor shall provide, set up and maintain the equipment, which is necessary for establishing and monitoring the measurement sections, during the construction period.
- The Contractor shall provide and maintain adequate lighting, ventilation and platforms, including the person in charge of access to all the instruments.

The recorded measurement results are immediately processed on a PC using special software packages for data interpretation and submitted to the Supervisory Engineer for review, and if necessary to the Designer electronically.

For optical monitoring of movements, a software package must be used use such as Eupalinos of Geodate or equivalent that enables direct data flow. It should be mentioned that the program provides at least the following analysis.
- The time dependent analysis for absolute movements
- Differences of shifts and speed of movements
- Analysis related to the cross-section
- Analysis related to the progress of the excavation of the tunnel with constant intervals of measurements or time difference compared to zero measurement (impact lines, ratios of individual components of displacement)
- Analysis with the stereographic projection
- Numerical and graphical output of total deformation including the deformation speed
- The calculation of the weight of shotcrete
- Certain coordinate components or any value that is based on the components (eg. tangents of the vertical / horizontal displacement) and the like.

In addition to the above features, program should enable entering of the following data:

- Date and time of the profile excavation
- Profile chainage
- Excavation face chainage
- Distance of the excavation face
- Direction of observation
- The first measurement
- Last measurement
- Date of processing
- Determine the proper measure of deformation display,
- The name of the Contractor and Investor
- Name of the tunnel with a note in which tube measurement is done and at which portal.

17.6. Final provisions

Deformation measurements must be made on a daily basis, and in accordance with the attached frequency of convergence measurement, which are given in geotechnical missions

or main design. The results of measurements of the Contractor shall be entered in the form MK 1 and submitted to the Supervisory Engineer for review.
The coordinates of the observed measurement profile shall be kept in a database immediately after the measurement.
The Contractor shall submit to the Supervisory Engineer a print of instruments in dxf format or ASCII file for purposes of verification.
If an unplanned delay in work on the excavation of the tunnel happens, the Contractor shall perform convergence measurements at least once a month.
The Contractor is required to have at the tunnel site a professional Geodetic team all the time of construction of the tunnel. If Geodetic team of the Contractor does not perform work on the measurement of convergence of primary support in accordance with this Instruction and / or in accordance with contractual obligations, Supervising engineer has the right to remove or replace it. All consequences resulting from the above shall be borne by the Contractor at its own expense.

Appendix
- Form MK 1

18. INSTRUCTIONS FOR DESIGN OF SECURITY SYSTEMS IN TUNNELS ON CORRIDOR Vc

REPORT SUMMARY

Name of the project: **MOTORWAY ON CORRIDOR VC ,BIH,TUNNEL SAFETY GUIDELINES**

Number of the project: **-**

Name of report: **GUIDELINES FOR DESIGNING TUNNEL SAFETY SYSTEMS**

Issue Number: **DRAFT (1)**

Revised	**1**	**2**	**3**	**4**
Date	**5.12.2013**	**9.1.2014**		
Name	**1st draft**	**2nd draft**		
Prepared	**Hamid Lihić; Jasmin Burzić**	**Hamid Lihić; Jasmin Burzić**		
Controlled				
Approved				

Introduction

Project of the Corridor Vc Motorway began as a preliminary design in 2005 and 2006. Then the basic motorway route was defined, as well as the basis for making all electrical installations. Once, the Preliminary Design, which also served as a term of refrence was adopted, preparation of main designs started, which in line with public procurement, have been performed by different companies. For this reason, there have been various technical solutions, both in the construction and transport design, as well as installation designs.

Public Motorways of the Federation of Bosnia and Herzegovina Mostar, in order to standardize technical solutions of the motorway on the Corridor Vc, has prepared a "Set of instructions for the design, procurement, installation and maintenance of motorway elements, structures or their parts."

In this set of instructions, electrical installation covers outdoor LED lighting at toll collection points, toll station, interchanges, rest areas and the traffic control centers, with quite precise directions for creation of outdoor lighting designs. Regarding weak current system the following topics have been dealt with: structured cabling, network infrastructure, telephony, video surveillance, servers and server platform, other communication and sensor equipment.

As the highway corridor Vc has a significant number of tunnels, Public Motorways of FBiH Mostar wanted to pay a special attention to these structures. In order to achieve high safety standards it is necessary to ensure that the design solutions of different systems are compliant with the best international standards and instructions in this area.

This set of instructions is to provide guidance for the design of the tunnel to ensure optimal solutions of tunnel safety systems.

18.1. Basic information about the tunnels on the motorway

Several tunnels of different lengths have been designed on the Corridor Vc. What is important is that there are not designed tunnels longer than 3 km, which have special construction rules, as well as ventilation system and electrical installations.

National (BiH) regulations for the development of tunnel designs do not exist. In this case according to the law, international regulations and standards are complied with. The architects designed the systems so far mainly according to Austrian RVS guidelines. In accordance with these guidelines, the tunnels are divided according to the length into tunnels below 500m, tunnels whose length is 500-1000m, and tunnels whose length is over 1000m. The following table shows which designs should be included in the main tunnel design due to its length.

Tunnel length	**0-350m**	**350-500m**	**500-1000m**	**1000-3000m**
Portal substation design	+	+	+	+
Tunnel substation design	-	-	-	+
UPS system design	+	+	+	+
MV power supply of substations	+	+	+	+
Tunnel lighting and low voltage power supply	+	+	+	+
Mechanical and electrical design of ventilation	-	-	+	+
Fire alarm systems with sensor cable	-	-	+	+
Automatic fire alarm system	+	+	+	+
Design for automatic detection of incidents	+	+	+	+
Design for radio communication in tunnels	-	-	+	+
Design for PA in the tunnel	-	-	-	+
Telephone call system	+	+	+	+
Remote control of the tunnel	+	+	+	+
Traffic information system	+	+	+	+
Heating of hydrant network pipes	depending on Hydro-technical design			

The following are guidelines for development of specific designs listed in the table.

18.2. Portal substation design

Introduction

For purposes of the power supply of tunnel consumers, the plateaus that are designed in the construction part of design in front of entry/exit tunnel portals, it is necessary to design so-called portal substations. The minimum capacity of the field for a certain location is 100 kN / m2. Selected location for substations as an independent facility must be provided direct and unhindered access. It is necessary to provide vehicular access from the side to serve the power transformer. Portal substations need to be designed as cable ones, in the concrete case, with internal serving.

18.2.1. Construction design

The substation facility should be designed as the typical reinforced concrete prefabricated structure, which is designed to accommodate a substation in one part, and the accommodation of other equipment (UPSs, RO UPS, communication cabinet and cabinet for

remote control system) in the second half. External dimensions are approx 7,70x5,00x2,60m. Depth of foundation hole underneath the ground slab is 0.80m.

In the part of the substation for accommodation of the elements, power transformers are mounted, HV and LV switchgear, the disposition of which should be an integral part of project documentation. MV and LV plant must have free access and serving from the facility interior.

Substation facility should be made of precast concrete elements MB30 concrete, waterproofing V4 size, with reinforcement steel GA 240/360, RA 400/500 and 500/560 MA. The reinforcement of all components of the building should be interconnected by welding and grounded through the capsule for grounding and potential equalization collector, by which is derived galvanic connection of elements.

Holes for mounting equipment are to be designed in the ground slab. In the part of the foundation below the power transformer a barrier is predicted, which provides function of oil well or the collection of possibly leaked oil. The wall and the bottom of the oil well is coated with non-aqueous dispersant two-component epoxy coating. In the foundations of the building holes should be predicted in which are placed plastic pipes for inlet of HV / LV cables. Depending on the location, it is necessary to predict the rain water drainage. The roof of the building needs to be carried out with a minimum slope.

Four double and one single door shall be designed at the facility, which are made of anodized aluminum, with a cylinder lock and universal key. All doors in the upper and lower portions should have blinds that allow the necessary cooling and ventilation in the substation. On the inside of the blinds, mounting of small aluminum mesh id planned that prevents the entry of small animals.

Constructive foundation depth of the facility is performed at a level of -90 cm above the level of definitely improved surrounding terrain, so that the height difference between the surrounding area and the finished ground of the building is 20 cm.

Under the foundations of transformer substation, a concrete slab is designed with a minimum thickness of 10 cm, with concrete MB20, which allows building foundation on the ground of minimum capacity of 100 kN / m2. For fields with less capacity, it is necessary to replace soil with higher thickness of supporting concrete slabs or gravel up to the mentioned level.

18.2.2. Electro-technical design

Substations which serve to supply consumers who are in the tunnel, must meet the requirement of a redundant power supply, which is done by the designed installation of two transformers, with associated low voltage cabinets that are connected with field wiring, so that in the event of failure of one of the transformers, the second fully assumes its load. Transformers are oil, foldable 10-20/0.42 kV, with installed capacity set by applying conditions (250 to 1,000 kVA, depending on the installed capacity of consumers).

The transformer has to meet the standards for three-phase oil distribution transformers DIN 42523 and IEC Publ. 726.

Basic technical characteristics:

Rated power (kVA)	250	400	630	1000
Rated transformation ratio (kV)	10-20/0,42 (foldable)			

Frequency	50Hz	
Compound	Dyn 5	
Short-circuit voltage	do 4%	do 6%
Voltage regulation	±2x2,5% of rated primary voltage	
Test voltage	125/50 kV	
Cooling	ONAN	
Degree of protection	IP00	

The transformer must be equipped with:
- Pocket for thermometer
- Grounding plug
- Draining for oil
- Hooks for lifting
- Front plate
- Thermal protector
- Safety valve
- wheels
- Opening for pouring oil

Transformers need to be placed at the side of the facility, facing corresponding connectors to the HV/LV installation. Behind the door a wooden barrier is placed as protection against accidental contact of energized parts. Cooling of the transformer should be predicted through natural circulation of cold and warm air through the blinds at the door of transformer substation.

The switchgear 20kV should be of the RMU type, which consists of two line and one transformer box. Because of redundancy, it is necessary in each SS to install two such blocks.

The switchgear should be a standalone cabinet, made of stainless steel, fully shielded and prevented from contacting energized equipment. Insulating and interrupting medium is SF_6 gas.

Main technical data of the switchboard:

- Rated voltage	24kV
- Rated current bus	630A
- the rated frequency	50Hz
- Isolation and arc extinguishing medium	SF_6 gas
- tolerated atmospheric impulse voltage	125kV
- one minute voltage of industrial frequency	50kV
- Short time withstand current (1s)	20kA
- Peak withstand current	40kA

Transformer boxes should be equipped with:
- A three-pole switch disconnector 24kV, 200A, 20kA,
- Fuse 24 (12) kV, rated current to the rated current of the transformers that provide three-phase disconnection of the switch disconnectors at life end of one or more fuses,
- Earthing blades,
- Additional equipment for the remote control.

Line boxes should be equipped with:
- An electric motor powered three-pole switch disconnector 24kV, 630A, 16kA,
- Earthing blades,
- Additional equipment for the remote control.

Each box should have an accessible cable compartment. The cables are connected to the front of the block, by dismantling of protective tin plate.

At the front of the switchboard mounting of blind scheme is done with condition signalisation of individual switching devices. At the front of the transformer box a tripping button should be predicted.
The switchgear is equipped with an operating mechanism with an internal, integrated mechanical locking.

By default, the box should be equipped with more:
- Bushings for cable connection of the block
- Internal blocks to prevent irregular operation of earthing blades under load
- Locking system to disable access to fuses and cable connections, when appropriate box is not grounded and the impossibility of turning on switch disconnectors when cable cover is not installed
- Capacitive voltage indicator.

In order to realize the remote control, the plant should have the option of a motor drive on machines and equipment for the remote control. Line cells need to be fitted with a short circuit indicator of minimal sensitivity 400A.

Connection of transformer to 20kV switchgear, should be done with cable line, with single wire cables 12/20 kV, XHE 49-A, 3x (1x50 / 16) mm2. Connection of the cable to the transformer bushings and 20kV installation is carried out with cable completion and Al-Cu lug, and to the switchgear via T-connection adapters.

Low voltage plant should consist of two low voltage closets and a connecting cell. LV cabinets are free standing, made of steel profiles and twice pickled sheets 2 mm thick, corrosion protected by method of electrostatic painting. Approximate dimensions of one closet are (1.850x500x1.800) mm. On the side of which serving is done, the plant should be closed and protected against accidental contact of energized equipment.

Main technical data of low-voltage installations:

- Rated voltage (V)	400
- Rated current bus (A)	1250
- rated frequency (Hz)	50
- Short time withstand current (kA)	25
- Peak withstand current (kA)	50
- The degree of mechanical protection	IP 00

One LV cabinet consists of a supply and distribution box.

LV installation has three production units: transformer I, latch-longitudinal and transformer II. The plant is designed to be done in the following modes, with the provided mechanical interlock of the parallel operation of transformers:
- Normal mode: the transformer I and the transformer II work independently, switch the longitudinal field is open;
- In the event of a failure or outage of one transformer, the second transformer supplies complete consumption of both transformers, switch the in longitudinal box is closed;
- Due to possible ill effects on the distribution network, the equipment is not dimensioned for parallel operation of transformers.

Basic equipment of LV plant (NNSB1 I NNSB2):

- LV compact breaker with electric drive, 500 V, 1250 A, with microprocessor protection LS / I adapted to the transformer of provided power and mechanical interlock (transformer I and II inlet) - 2 pcs
- LV breaker with electric drive, 500V, 1250A with mechanical interlock (longitudinal disassembly box) - 1 piece
- Disconnecting fuse blocks 400A - the number of pieces to the number of outlets
- Compact switch 160A 3p - 2 pieces
- LV breakers with manual operation, 500V, the nominal value of the current according to installed capacity of the consumer, with the microprocessor protection LS / I - the number of pieces to the number of outlets
- Pole miniature circuit breakers
- Disconnecting fuses with fuse indication
- Power measurement transformers
- Network analyzer for measurement of electrical quantities - 6pcs
- Over voltage outlet device quadrupole 3p + N, 65 kA
- Other: socket, fuses for electrical lighting and cooling, protection and measurement, wiring kit.

The connecting line between the transformer and LV wiring must be carried out with single wire cables, insulated with PVC mass resistant to temperature up to 378.15 K / 105°C/ nominal voltage up to 1 kV, for the transformer of rated power.

Depending on the strength of the installed power transformer, as well as the types of consumers, the substation should provide for the installation of automatic compensation. Automatic compensation is placed in two separate closets, next to MV installations.

Power transformer protection from short circuit needs to be provided with high voltage high-efficient fuses of the rated current to the rated current of transformer and rated voltage to the rated network voltage, in the transformer boxes of high voltage substations. Burnout of one or more three-pole fuses switches off switch disconnector in the transformer box.

Power transformer protection against overloads and internal faults needs to be accomplished using contact thermometer, which also disconnects the three-pole switch disconnector in 20kV transformer box.
Additional protection should be planned against overloading of transformers using thermal breaker on the LV switch in supply boxes of LV block.

Protection of LV output from the short-circuit is to be achieved by using low voltage high-efficient fuses of the rated current specified under nominal load of consumers. Backup protection of LV installations and outages against overload and short circuit, needs to be achieved by LV switch. Protection against atmospheric and other over-voltage is to be made with the surge arrester, which is set to LV collectors. Indicative measurement of electrical quantities in low voltage measurement of current, voltage and other electrical quantities using the multifunction measuring instrument is done in LV block

Device control of MV plant comes down to the fact that the blind scheme is used to check condition of the switching unit to be managed and execute manipulation turning the switching lever. The front panel should show visible condition of compatibility of appliances and that the direction of rotation of the lever is marked. For emergency stop, switchgear is equipped with a separate disconnection push button.

The substation design includes collective grounding or interconnection of work and protective grounding. As part of the grounding system in substation, installation for potential equalization is to be provided, by connecting all metal masses which in normal operation are not powered up, to the system for potential equalization. The installation of the potential equalization is done using FeZn tape 25x4 mm in size. Ring for potential equalization of TS is galvanically linked to a ground electrode of the object or the ground electrode of the site. Earthers of substations are typically performed using two rings around the building, and connected with FeZn tape that is embedded into the entire length of the cable trench.

In addition to the manual, the remote control of equipment of MV and LV wiring should be enabled from the Center for maintenance and traffic control (COKP). At the same time, the requirements must be met regarding security of manipulation and blockades that prevent incorrect handling. All the elements that are the subject of close and frequent contact, should be isolated and protected, so that maximum protection against over-voltage is achieved. Equipment for remote monitoring and control is to be placed in a separate communication cabinet of the relevant dimensions.

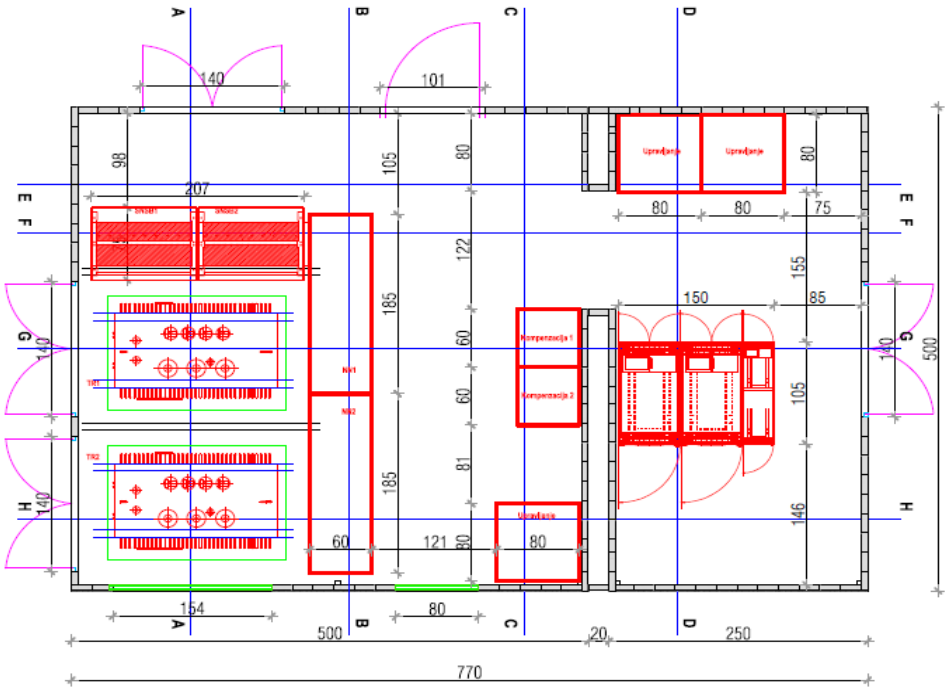

Figure 1 – Portal substation – equipment schedule

18.3. Tunnel substations

In cases where the length of the tunnel is such that it is impossible to supply consumers of tunnel equipment from the portal substations, or such power is not economic, it is necessary to design the tunnel substation. It is estimated that the tunnel substations shall be designed for tunnels longer than 1000 m, or if there is a technical and economic justification, tunnel power substations can be designed for shorter tunnels, and vice versa, portal substations sometimes can satisfy consumers in tunnels longer than 1000 m .

For the design of tunnel substation, the same guidelines are applied as for the design of portal substations. Text below outlines only the difference between them.

18.3.1. Construction design

Tunnel substations must be located in cross passages for vehicles, between left and right tunnel tube. The substation should have cable performance with internal serving. Regarding this, the designer of the construction section of the tunnel, should provide a room that will be a special fire zone, with sizes to meet all requirements for safe and smooth operation of people and plants.

Framework internal dimensions of the rooms to accommodate transformers are approximately 5,30x2,10x2,70 m (width x depth x height), a room SNSB, NNSB and UPS 5,80x4,30x2,70 m (width x depth x height), room to accommodate control equipment 3,40x2,10x2,70 m (width x depth x height), depth 0.6 mm of cable channels. Selected location of substation must be provided direct and unhindered access. The door to serve are from one side of the building, and driveway at the side used for serving the power transformer is sufficient. Since the tunnel type of substation, according to the regulations, should represent a unique fire-fighting unit, on the TS facility three double-leaf fire-proof doors have to be installed, with a cylinder lock and universal key.

Cooling and ventilation in the substation is provided by forced air circulation, installing extractor fans and the corresponding openings with the fire dampers. The interior walls and ceiling of the substation are painted with white dispersion paint.

18.3.2. Electro-technical design

The tunnel substation provides for the installation of two dry foldable power transformers 10-20 / 0.4 kV power to the power of the installed equipment, with adequate reserve.

The transformer has to meet the standards for dry three-phase distribution transformers DIN 42523 and IEC Publ. 726.

Basic technical characteristics:

Rated power (kVA)	250	400	630	1000
Rated transformation ratio (kV)	10-20/0,4 (foldable)			
frequency	50Hz			
connection	Dyn 5			
Short-circuit voltage	from 4%		to 6%	
voltage regulation	±2x2,5% of rated primary voltage			
Test voltage	125/50 kV			

cooling	ONAN
degree of protection	IP00

The transformer must be equipped with:
- Grounding plug
- Hooks for lifting
- Front plate
- PTC probes
- Protective relay
- wheels

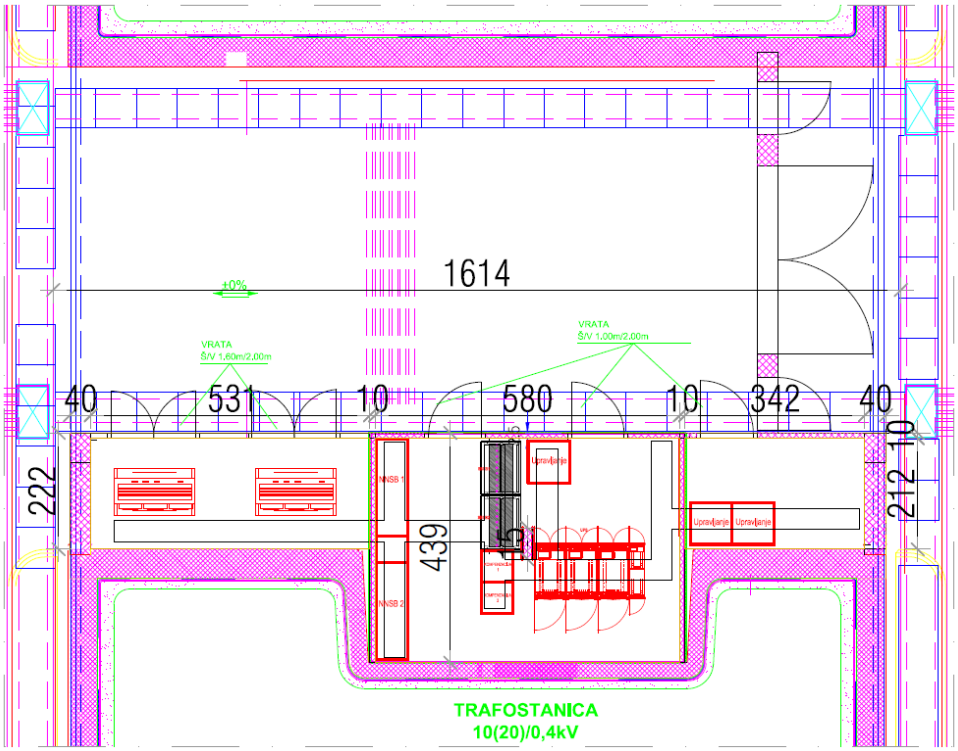

Figure 2 – Tunnel substation – equipment schedule

Plan for the installation of transformers with wheels on steel girders **UNP160.**

Due to the location of the substation, as well as the disposition of equipment in SS connection transformer - LV block is to be made with cable 3x (2x (P / FT (1x240)) mm^2 +P/ FT 1x (1x240)) mm^2, for all the installed capacity, in order to provide maximum typing. In the technical description and bill of works a note should be introduced that due to more cables per phase, there is the possibility of unbalanced loads of individual cables, and when making connections transformer - LV installation, a special attention must be devoted.

Protection of power transformer against short-circuit is the same as with portal substations achieved by high voltage high-efficient fuses of the rated current to the rated current transformer and voltage to the rated voltage network, in the transformer boxes of high voltage plants. Burnout one or more fuses switches off three-pole switch disconnector in the transformer box.

Power transformer protection against overloads and internal faults is accomplished by using PTC probes and the corresponding relay, which also switches off the three-pole switch disconnector in 20 kV transformer box.

Additional protection against overload of transformers is accomplished by using thermal breaker on the LV switch in supply boxes of LV block.

18.4. Uninterruptible power supply system (UPS)

For the purpose of supply of priority consumers, in the event of a failure of power supply from the distribution network, it is necessary to design a UPS tunnel system. UPS system should supply the following consumers:
- The safety and evacuation lighting in the tunnel
- All equipment for the management and control of all systems
- Distribution cabinets in SOS niches and cross passages

UPS tunnel system consists of the UPS cells that are placed in special rooms that are an integral part of substations, as more specifically described in the guidelines for the design of substations.

UPS devices should be modular and meet the requirement of a redundant power supply. Redundant power is to be achieved by installing UPSs with more " Power Modules " for consumers in each tunnel tube. UPS blocks will be dimensioned and connected in a way that the UPS unit for supply of associated consumers of one tunnel tube can accomodate related consumer spending in the second tunnel tube while maintaining the prescribed autonomy. Prescribed autonomy with a condition of redundant power supply is 60min.

18.5. Medium voltage power substations

Supply of power substations of the electric power system is defined by the Independent System Operator and the Transmission Company of Bosnia and Herzegovina through new and existing SS 110/10 (20) kV.

Cable line to connect to the distribution substations is realized on the principle of input-output, and is performed by energy halogen-free cable 12/20 kV. Medium voltage cable line is formed of three single core cables laid in a triangular bundle. Medium voltage cables in the tunnel are laid in cable channels protected in the HDPE pipes.

MV cables are laid on the clay field in the form of a triangle freely in the channel depth of 80 cm, while in the canal under roads HDPE pipes are laid with diameter Ø200 mm at a depth of 120 cm. In the entire length of the route HDPE pipe Ø50 mm is laid in a trench, in which optical fiber cable will be blown.

18.6. Tunnel lighting

Photometric calculation and tunnel lighting modes

As a basic document for the photometric tunnel design, Technical Report of the European Standard EN / CR14380 - Annex A2 will be used. On the basis of the section of the entry portals and the longitudinal profile of the tunnel entrance, it is necessary to assess the shares of sky, pavement, rocks and greenery in the driver's field of vision for both tunnel tubes. Based on these values and data on the tunnel orientation and the driving speed calculate the value of the luminance of access zones for both tunnel tubes. Luminance zone threshold L_{th} is set based on the value of the coefficient k which gives the relationship between the L_{20} and L_{th}, based on EN / CR 14380 - Annex A2, for the allowed speed of driving (stopping distance) and provides traffic flow. It is also necessary, based on the EN / CR 14380 - Annex A2, to determine the luminance of the interior zone of the tunnel. Along the entire tunnel at night time, it is necessary to provide the level of luminance of 2cd / m^2. To achieve security lighting it is necessary to provide medium and minimum level of pavement luminance Esr = 10lx or Emin = 2lx.

Depending on the luminance of the approach zone, the design shall process following modes of switching:

Daily lighting
- I mode - 100% luminance threshold zone
- II mode - 75% luminance threshold zone
- III mode - 50% luminance threshold zone
- IV mode - 25% luminance threshold zone
- V mode (dusk) - 12.5% luminance threshold zone

The design is necessary to provide continuous monitoring (luminance decrease) along the CIE curve, so that the driver would not feel sudden reduction of the level of brightness and to achieve a more efficient solution.

In addition to these modes of daylight, the following modes should be planned:
- VI mode - 4.0 cd / m2 (mode of increased traffic during the night and the mode in the event of an accident in a tunnel at night time)
- VII mode - 2 cd / m2 (night lighting)
- VIII mode - 10 lx (emergency lighting)

Tunnel lamps should meet all the light-technical calculations. In addition, they need to be of robust construction, which provides a high level of protection against corrosion, shock and vibration. They should be made of stainless steel or high-strength extruded aluminum. Degree of protection is IP66. The light source should be protected with protector made of tempered (hardened) glass, with impact resistance IK08. Connectors in the lamp should be individually separable without the use of tools. As a light source energy-efficient sources are used- high pressure sodium and / or LED light source.

Analysis have shown that for the tunnels whose length exceeds 1000m, it is profitable to use lamps with LED light sources. As LED technology is relatively new in the field of lighting, below are briefly given some of the advantages and disadvantages of LED lighting.

- LED technology is increasingly spreading in the market of lighting. It is expected that by 2014, 44% of the market of outside lighting realized with LED light source, and by 2020 as much as 74%.
- Efficiency (luminous efficiency) of LED sources is growing from year to year. This efficiency is approaching the efficiency of sodium sources, even bigger for all the power up to 150 W (250 W, the efficiency of the sodium source is 122.67 lm / W, and for 400 W it is 130.78 lm / W)

- The lifespan of LED sources is significantly higher than sodium light sources. With most high quality LED lamps, after 100,000 h hours, a light flux declines to 90% of the nominal flux, which means that for designed maintenance factor of 0.8 (the flux decline of 80% at the end of exploitation period, i.e. before replacing the source) , it can be expected that life expectancy is even higher. For high pressure sodium sources, it is assumed that the life expectancy is in the range 16,000 to 20,000 h in the case of the best quality sources that can be found on the market - five times lower life expectancy, which significantly affects the cost of maintaining of the of lighting installation in the tunnel (replacement of LED sources is done only after approximately 10 to 15 years in continuous operation (24 hours a day))
- With LED sources the so-called "flicker" effect is avoided, which is often present in installations with conventional HID sources. Using high-quality drivers avoids the work in the frequency range of 70-130 Hz, which is problematic from the point of flickering.
- LED sources can be dimmed up to 10% of the initial luminous flux (in approximately linear relation power source decreases), while due to the physical limitation, sodium sources can only work to the value of 20% of the initial flux (or 35% strength).
- -Thanks to dimability of LED sources, it is possible to effectively regulate the flux sources and achieve more efficient management in tunnel installation, which can achieve significant energy savings. Also, the LED sources have virtually instant response when switching on and dimming, while with the sodium sources ignition time is 5-10 minutes until reaching the nominal flux (initiation period of sources)
- LED sources provide white light (color temperature app. 4,000 K), which is more pleasant to the human eye from yellow (color temperature of about 2200 K) produced by sodium sources.
- The index of color reproduction (the ability to of the colour of illuminated object to be as close to its natural color, i.e. the one in daylight) is higher in LED sources - it is a minimum of 70, while the sodium source reproduction index is about 40.
- Thanks to the high-quality drivers that enable the operation of the LED chips in a wide voltage range (in this case from 120 to 277 V), fluctuations in the network voltage have much less influence on the work of the LED than sodium sources.
- - LED sources start virtually with rated current (excluding the surge currents whose value is limited by adding the appropriate resistor in lamp circuit), while the sodium sources starting current is typically 50% higher than the rated one, which is extremely important when designing and sizing tunnel lighting.
- Thanks to the programmable drivers that are in the lamps, it is possible to regulate the luminous flux of the source during operation.

In addition to numerous advantages, we should mention the one drawback of LED technology:
- LED sources are much more sensitive to temperature (under working conditions at the PN connection temperature of the expected 75 ° C, it can be expected that the luminous flux is

lower and over 10% compared to laboratory conditions (25 ° C)). Also, LED drivers are sensitive to temperature and can be permanently damaged if the ambient temperature (temperature in the lamp) exceeds the maximum permitted. Sodium sources in combination with a robust electromagnetic ballasts almost do not react to temperature changes.

When determining the location of lamps, it is necessary to take into account the number of lanes, the geometry of the tunnel, maintenance of lamps, and collision with other installations (tunnel fans). Lamps should be set up to meet the photometric calculation, good visual guidance, but no less important aesthetic appearance. When choosing and providing technical description of the lamps, it is important to prescribe mandatory measures for periodic maintenance of the lighting.

In addition to the lamps of general and safety lighting, the project is necessary to provide for the installation of **directional markings**. Directional markings show the edge of the pavement in the tunnel, and are performed in the technology of the light emitting diodes (LED) and have an uninterrupted power supply (UPS). Lamps for marking pavement edge from the right side in the direction of travel should illuminate red colour light and on the other side white colour, because of the visual effect in the case of two-way traffic in a single tube. Lamps for marking pavement edge on the left in the direction of travel illuminate red light on both sides. They are placed at a distance of 25m inside the tunnel and at a distance of 15m at the beginning of the tunnel and in the curves. Installation of lights is on the curb of service routes (sidewalks).

The tunnel is necessary to provide for the installation of **lights to determine the distance**. Lamps are performed also in LED technology and placed at the right side in the driving direction to the wall of the tunnel (at the height of 1m from the floor), at a distance of 50m. Color is light blue.

On the left side of tunnel tube in the direction of travel, lamps for visual guidance and marking evacuation routes are mounted at the distance of 25m. Lamps can be configured to have a protector of tempered glass with label pointing directions of evacuation and distances from the exit on both sides, and lamps can be used that will illuminate the self-reflecting labels that are placed in front of or behind the lamp.

Above the door of cross passage, it is necessary to provide LED lamps (character type III-128 - "Emergency exit"). It is necessary to predict lamps to mark the doors of SOS niche and doors of cross passages. It is also important to provide watertight (IP65) fluorescent lamps with PMMA cap and EVG pre-connection device for lighting of SOS niche and a pedestrian passage. Parting tunnel zone is necessary to be lightened by the lamps for outdoor lighting that are mounted on the external lighting poles, so that the luminance of the parting zone is 2 cd/ m^2.

Lighting control

Tunnel lighting lamps need to be supplied with the electricity and connected so that they can be manually and automatically controlled.

Manual control should be local and remote. Local lighting control should be planned from distribution cabinets of tunnel lighting. Remote lighting control system should be planned over the remote control system (RCS), from the center for traffic control. To this end, in distribution cabinets of tunnel lighting, installation of equipment is planned that allows the control and signaling of the state of tunnel lighting, via interface with potential-free contacts.

Lighting maintenance Service in the traffic control center should be enabled the following:

- Monitoring the current operating mode of lighting
- Signaling of failure by distribution boxes, and inside them per groups of failure
- Remote dial of lighting mode

Automatic control of lighting should be planned over fotoluminance meters, to be placed in front of the tunnel at length of stopping distance. Fotoluminance meter is a device that continuously measures luminosity of access zones of the tunnel, and based on that generates a number of relay outputs. The signal is lead further over the signal cable to the first control cabinet of tunnel lighting. The link between individual lighting cabinets is achieved through the tunnel remote control system.

18.7. Low voltage power supply and cable distribution

For the supply of individual consumers of tunnel equipment, mounting of distribution cabinets is to be planned, that are placed in the tunnel electrical niches, whose construction is planned in the construction part of the project. The required dimensions and layout of the tunnel niches are given in the drawing attached to this document. Niches are functionally divided into electro niches that are used to supply and control equipment of ventilation and lighting of the tunnel, and SOS niches that are used for power supply and accommodation of CPS unit, emergency cabinet and PA cabinet. For the supply of devices and equipment in cross passages for pedestrians and vehicles, control cabinets should be designed, which are built into the passage wall.

Low voltage supply of distribution cabinets is performed from the portal and tunnel substation. Part of the consumers is required to connect to the uninterruptible power supply (UPS), so that the distribution boxes should have the network and the UPS part.

Distribution of supply cables from low voltage cabinet in SS to distribution cabinets is made in the cable channel, which is located under the service routes, on the right side of the tunnel tubes (in the direction of travel) and the passage beneath the pavement is made in the cable channel, which is provided for in the construction design.

In the cable channel cable trays (number of trays depends on the number of cables) are mounted. Cable shelves, brackets and mounting accessories, shall be made of stainless steel V4A class according to DIN 4102.

Notwithstanding the foregoing, the cable trays in cable channel can be made of galvanized material, provided that the cable channel is covered with concrete lids and poured with liquid asphalt. In this case the cable trays must be protected from corrosion by hot galvanization by

the process of immersion according to DIN EN ISO 1461, the thickness of the zinc layer 40-60 µm. All subsequent tray cuts, must be subsequently protected with zinc against corrosion. The screws should also be hot dip galvanized. Anchors for concrete must be of stainless steel.

Cable trays used for carrying fireproof installation must have a fire-proof certificate as a system.

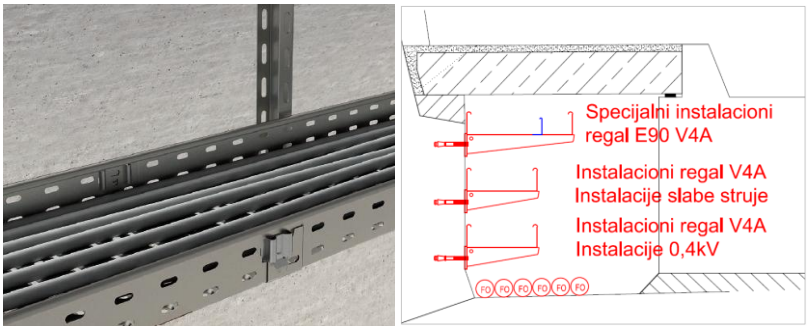

a. on the tunnel ceiling b. In cable channel

Figure 3 – Cable trays

The aggressive tunnel atmosphere is due to the increased presence of the combustion products of gases in car engines, local climate impacts, extreme humidity and increased vibration. Because of the combustion of gases in automobile engines the following products are generated: sulfur dioxide SO2, nitrogen dioxide, NO2 and hydrogen sulphite H2S. These products make the tunnel atmosphere highly corrosive. European Directive 2004/54/EC of the European Parliament and of the Council prescribing minimum requirements for safety in tunnels with a minimum length of 500 m in the Trans-European Transport Network (TERN) which includes Corridor Vc, stipulates the use of stainless steel as a material for making the installation of supporting structures. Stainless steel V4A class is recommended for the creation of cable trays, support structures and all the associated mounting elements and accessories, because the material is corrosion resistant, is non-toxic when burning, and it is possible to create a structure that can meet the requirements for fire resistance. The systems that must maintain functionality in the event of fire must have system fire-resistance feature, which is proven through to release of " Certificate of system fire-resistance ". Also, an important requirement is prescribed for all tunnel supporting cable constructions and their elements not to emit toxic (halogen) substances during combustion.

Installation cables of increased tunnel lighting are laid in the cable closet. The closet is mounted on the ceiling console with variable slope. Cable tray and corresponding fastening accessories should be made of stainless steel class V4 1.4571. After the selected type of closets and lamps, in the working design, it is necessary to make structural analysis of the closet with the exact layout and number of carriers, as well as other dedicated connecting and suspension accessories. It is necessary to separate the distribution of increased and the base (security) lighting, since security lighting needs to meet requirement of functionality in case of fire as a system (fire resistance class E90). All elements of the cable closet must be

galvanically connected to the integrated connectors and connected to the safety bus in control cabinets in accordance with DIN EN 61573.

a. Mounting lamps of basic lighting b. Mounting lamps of increased lighting

Figure 4 – Lamp mounting principle

Distribution of cables from distribution cabinet, which is located in the electrical niche, from the cable closet mounted at the tunnel calotte, needs to be done in HDPE pipes installed in the concrete tunnel lining (according to the number of cables, determine the number of pipes given as input to the designer of the construction part of the tunnel).

All cables for the network supply must have halogen-free insulation. Cables for uninterruptible power supply must have flame retardant halogen-free insulation with maintenance functionality of at least 90 minutes. Power cords of safety lighting in addition have a heat-resistant insulation according to IEC 60092-353, IEC 60331-21 (90), IEC 60754, fire resistance E90.

Cable installation in the tunnel must not transfer fire from one fire zone to another. It is therefore essential for all cable penetrations from electrical niche and cable pasages passing in channels under the walls of cross connections to be isolated with special fire resistant mortar.

Distribution cabinets

In tunnel electrical niches, it is necessary to predict mounting of distribution cabinets of tunnel equipment, including following: lighting (ROR-XX), ventilation (ROV-XX), the cross passages (RO-PPX, RO-IVX) and SOS niches (RO S-XX).

Lighting distribution cabinets supply the lighting groups divided into lighting zones, permitted voltage drop and limit cable length within the zone. Each lighting cabinet has the power and the UPS distribution section that are supplied independently. Cabinets are of free-standing version with degree of protection IP 54. Cabinet housing must be made of twice pickled sheet thickness of 2mm. All parts embedded in the distributer must be fitted on the mounting frame or the mounting plate to allow latter disassembly and reassembly of each item of equipment without having to dismantle other parts of equipment. All components of distributor should be finally connected and linked in the workshop. All wires for wiring must be neatly stacked in perforated PVC ducts with lid.

All metal doors of distributers that have built in electrical equipment must be connected to protective grounding line. During wiring, neutral lines must be blue and the protective lines

must have yellow-green color. All other lines cannot have those colours. Bus bars must be marked by standard with L1, L2, L4 stage, N for the neutral bus bar and PE for the protective bus bar. Sockets on the end of the conductor must be pressed.

The use of sockets whose cylindrical surface is formed by bending, i.e. have a longitudinal cut, is prohibited. Bolts tightening the conductors to the bus bars are required to have elastic pads. Connections of cables must be through the current amplifiers of the adequate dimensions. All amplifiers shall be marked in accordance with applicable standards. All cable cores must also be labeled as amplifiers they are connected to.

All equipment in the closet and the closet doors must be marked with engraved nameplates that must not be glued.

Soluble fuses require nameplate with the tag of maximum allowable cartridge. All cables are introduced into the distributor solely from the bottom side. Degree of cabinet protection must be at least IP54. External and internal surface of the distributor and supporting structure and fittings must be corrosion protected and painted.

Cabinets must be anchored. Each distributor on the inner surface of the door must have a pocket for documents. Closet documents include a single-pole diagram and operation scheme. All necessary minor material is understood. Functionality check-up and receipt of distribution cabinet shall be made in the workshop of the supplier with the obligatory presence of the supervisory authority.
Distribution cabinets of the cross passages only have UPS distribution part.

Closets are mounted into the wall of cross passages, on locations illustrated in the attached drawings, with built in equipment according to single-pole schemes. For distribution closets of the cross passages same general terms and conditions are applicable to the ones that apply to the distribution closets of tunnel lighting.

Measures to be implemented for the safety of the facility are:

- Distribution device in a special hermetic niche.
- Equipment in the closet protected from dew, by building in heater with thermostat in the cabinet.
- Lamps of individual voltage degree connected in several circuits, instead of o a single stronger circuit.
- The cables coming from the outside protected by over-voltage arresters.
- Auxiliary circuits of automation management, which come out of the tunnel (photometer) supplied with the UPS.
- Management solution of main contactors provides switching of lighting in the event of failure the auxiliary relay.

Measures for easier and faster maintenance:
- Distribution devices in a specific niche.
- Signaling failure of certain groups achieved by signal lights that are located in the closets and whose signals are transmitted to the control center
- Register of the drive duration, using the hours counter.

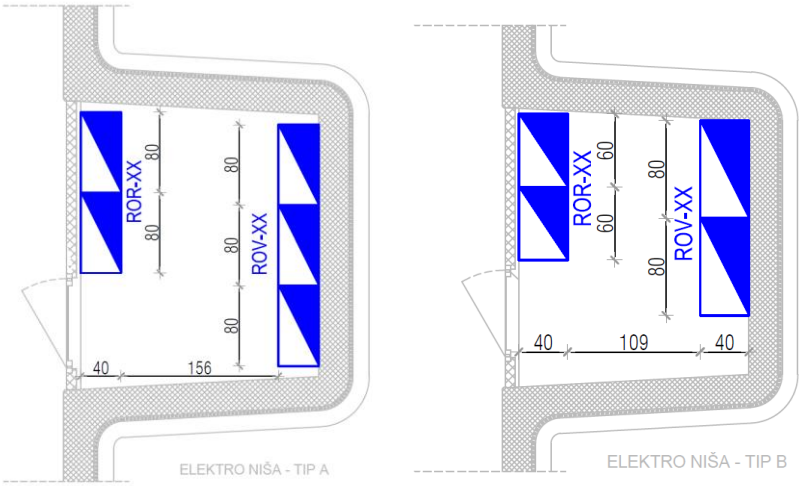

Figure 5 – Electric niche – equipment schedule

18.8. Electrical design of ventilation systems

As a basis for the development of electric technical design of tunnel ventilation, mechanical design of ventilation system must be used. The mechanical ventilation system design defines the exact position and the number of fans for each tunnel tube, engine fan power and fitting mode.

Low voltage distribution system of ventilation shall be made according to the electrical niche positions and positions of the fan. Principle to be used in the design is to supply and manage more fans from one electrical niche, with restrictions that in the electro-technical sense condition the limit length of power cords, optimal cross-sections of cables, and limit length to transmit control and sensor signals.

The fan engines are three-phase asynchronous. Fans operate reversible (bidirectional) and their fitting is done via the soft-start devices.

Automatic mode of ventilation system is done through a program that is made in the implementation design, according to the algorithm given in the mechanical design of ventilation system. Process control is carried out via remote stations (RS) of the remote control system, which should provide local autonomous operation of the ventilation system of each tunnel tube, whereby the central control unit of ventilation system is installed at the site selected by topology of the remote control system. The operator at the center for management and control should have the possibility of manual remote control.

There are three groups of signals passed between the control closets and remote stations:
1) Signals of the state of the system
2) Signals from the process sensor
3) Control signals for system management

Particular attention in the design should be paid to the protection of engines and equipment, and monitoring and signaling the state of the system elements. Each fan must be protected against overload and short circuit, overheat protection, excessive vibration alarm and heating

coil when the engine is not running. In case of fire operation mode, engine overheating protection should be eliminated.

The main consumers of high-power: fan engines and heaters are supplied from the network bus bars, and all the equipment of automatic control system and process sensors are supplied from uninterruptible power supply systems.

All cables of ventilation system that can be exposed to open flames in the tunnel tube are halogen-free and fire resistant according to DIN 4102-12. All cable closets and plates to cover the grooves must be made of stainless steel quality V4A 1.4571.

Cable closets in the channel on which the installation of fire-resistant system are placed, must be created in a fire-resistant version, according to DIN 4102-12.

Electric cables of fire resistance class E90 mounted on the clamps must be fitted with fire resistant clamps class E90.

All metal surfaces which in normal operation are not powered, must be linked and connected to the grounding electrode of the tunnel.

Process Sensors. The number and position of process sensors for ventilation system primarily depends on the type of tunnel profile, the type of ventilation system, the type of traffic and local regulations. Given that on the Corridor Vc motorway one-way tunnels with longitudinal ventilation systems are built, position of process sensors shall be defined according to the German guidelines for equipping and management of road tunnels, RABT.

Fog detectors to be installed in each zone of tunnel portal (10m).

Meters of CO level and visibility. It is recommended that the first meters of CO level and visibility are placed at a distance of 150 m from the tunnel portals. Other measuring points of CO and visibility are determined in dependence of the length of the tunnel. The distance between the measurement points within the tunnel tube should not be less than 200 meters and not more than 500 m.

Meters of intensity and direction of air flow should be arranged optimally according to the established schedule of CO meters and visibility. The distance between the measurement points within the tunnel tube should not be less than 200 meters and not more than 500 m.

Process sensors and all related equipment must be installed according to the technical instructions of the manufacturer of the selected measurement equipment.

Analog signals from the sensors are transferred to the analog input module of the controller and are software discretized. Based on the value of the levels and concentrations of individual values given in the mechanical design of ventilation systems, program algorithm of automatic mode is executed.

18.9. Automatic fire alarm system

Since the tunnels are places with the increased risk of fire, particularly strict protection measures must be applied in them. The purpose of the design is to provide efficient and reliable fire alarm system in the tunnel, and provide fire detection in the initial phase which is crucial to the rescue of traffic participants and maintaining of the stability and integrity of the structure, as well as other systems implemented in the tunnel.
Fire alarm system of tunnels is to be designed in accordance with the provisions of the documents:
- Directive 2004/54 / EC of the European Parliament and of the Council; April 29th 2004
- Austrian guidelines for tunnel design SSR 9281 (2004-08)
- Austrian guidelines for tunnel design SSR 9282 (2004-08)

Fire alarm system is expected for all two tube tunnels on the motorway. Equipment of tunnel fire alarm systems is dependent on the length of the tunnel and is treated in two ways:
- Tunnels to 500m have the following equipment:
    - Central part of the fire alarm located in the portal SS in UPS room, analog addressable line (loop) of fire alarm system with dotted optical thermal fire detectors, parallel fire indicators, input-output modules, inductive contacts in the housings for fire extinguishers and associated cables.

- Tunnels of 500-3000m have the following equipment:
    - Depending on the length of the tunnel, it is necessary to provide one or more of the fire alarm control panels, which are placed in the portal SS in UPS room, walkways or UPS rooms on special extensions in tunnel tubes (turnarounds for vehicles), several analog addressable lines (loops) of fire alarm with dotted optical thermal fire detectors, parallel fire indicators, input-output modules, inductive contacts in the housings for fire extinguishers and associated cables.
    - linear sensor optic cable installed on the ceiling of both tunnel tubes with associated optic cable controllers. The controller is placed in the same type of room as VDC.

On the level of detection, system is basically carried out using two types of detectors - along the tunnel tubes sensor optical fiber cable is to be placed and in in the substation, in the room of uninterrupted power supply (UPS) and electric niches, dotted-automatic smoke detectors are to be placed.

Hand-held detectors are to be installed in SOS niches and the entry and exit portals of the tunnel tubes. Given the length of the tunnel, each tunnel tube should be divided into more alarm zones, taking into account the positions of passages for pedestrians and emergency vehicles. Substations, UPS rooms, electrical niches and room to accommodate the central fire alarm system should form a special alarm area.

Connection of the system in the functional unit is performed with non-combustible lines of red colour , type JH (St) H 2x2x0,8 mm, which are placed as follows:
- In the tunnel installation channel are placed in halogen-free HEPD pipes of corresponding section,
- In electrical and SOS niches and the tunnel portals, cables are laid in a halogen-free PE pipes which are installed in cut slit in the concrete wall with a final mortar or concrete protected inox tiles (class V 4A)

- Optical sensor cable is mounted on the ceiling of the tunnel according to the manufacturer's instructions with clamps and spacers provided for operating temperatures up to 400 ° C.
- To connect the fire alarm control panel and OTS controller with the source of power supply, cable NHXH-J 3x1.5 mm2 must be used.

The organization and operation of the fire alarm system in case of longer tunnels need to be decentralized, which will be based on two or multiple fire alarm control panels (VDC).

Fire alarm system is based on a microprocessor steered control panel for fire alarm with programmable detectors (joining textual description to detectors), continuous monitoring, checking and processing the feedback of each detector in the system (detectors status - activated, faulty, etc.) and adequate program with elaborate scenarios of required action (necessary actions in different statuses of detectors, giving commands, checking the status indication of the connected detectors, devices, fire detection loops, etc.).

The fire detection control panels should be interconnected locally at the level of the tunnel in the network via the system bus bar. Control panels will also have to be connected to the fire alarm control system in the Maintenance and traffic control Centre (COKP). Network modules of both control panels will be through IP-based media converter, coupled to a multimode ring of the local network for traffic management in the tunnel, then through a fiber optic cable in single mode performance linked to the COKP. Local loop provides local communication of VDC and at the same time, in case of interruption of the loop in one place, continuation of local connections and connection to the COKP.

The fire detection control panels, through the network, have to transfer signals to remote stations (RS) that are in the road traffic stations (RTS), which are able to locally manage the tunnel. In doing so, each control panel transfers general fault signal, general alarm signal and one signal for each alarming zone covered, as well as the zone alarms of sensor cable. The alarm signal from a particular alarm zone, causes acoustic alarm activation in the COKP and, on the PC of fire alarm system, detection zone is visible and exact address of the detector that gave the signal, and on intervening monitors images from the place of the detection are shown. Fire alarm system in the tunnel operates autonomously and independently of the functioning of the control system in COKP.

All lines of transmission paths need to be calculated and selected as not to distort the signals transmitted and not to allow outside influence that could bring interference with system operation. Portable paths for fire alarm loops need to be predicted from power lines, in red color, which do not support combustion, without halogens. To connect fire alarm control panel to the source of the energy supply a cable is used that does not support combustion, i.e. resistant to fire at least 90 minutes.

Power supply of systems is to be provided from two independent sources. The primary power source should be from the stationary tunnel network 220 V with UPS part (a special circuit with specially marked fuse), and an auxiliary power supply from its own rechargeable battery (autonomy of minimum duration of 30 hours, of which at least 0.5 hours in a state of alarm) associated to fire detection control panels that are operating normally in charge mode.

Within the fire detection system and fire extinguishers with dry powder, which use as a propellant a bottle with CO2. FE appliances are placed in emergency cells, i.e. SOS niches, as well as on the entry and exit tunnel portals. Appropriate signs must be used to designate the presence of fire extinguishers. FE devices should be able to effectively extinguish all classes of fire except fire burning metals and their alloys. Cabinets for fire extinguishers should be made of steel, protected with prime colour and painted finish in red. At the door of the cabinet should be marking label for Fire extinguishers, and the inside is equipped with holders for 2 fire extinguishers.

18.10. Automatic incident video detection

Construction of new modern roads and a steady increase in traffic demand an increased level of security, so that, in accordance with the existing international recommendations and guidelines, when equipping the tunnel the most sophisticated systems need to be planned. Particular importance should be given to the tunnels, where a collision, fire or explosion can cause large number of casualties.

Video system is one of the most important factors of tunnel safety. Its main task is to supervise and monitor the traffic in the tunnel and associated access roads, and alert operators in the event of an incident arising.

In addition to standard features of video systems, such as continuous transfer of images from part of the tunnel and its accesses, as well as temporary storage of video (with the possibility of browsing and permanent storage), the tunnel should include a system for automatic incident detection (AID), with the possibility of forwarding alarm messages to traffic remote control system.

The purpose of the AID system is the automatic detection of incidents occurred both in the tunnel and its accesses and extremely rapid alert of information on incidents occurred to the operator in order to facilitate the prompt and correct response and achieve the maximum possible safety for all road users.

It is necessary to plan a system of automatic incident detection based on image processing technology with the help of hardware and software platforms installed in COKP and the automatic incident detection should detect the following alarms:
- Sudden slowing of traffic flow
- Stationary vehicle
- A vehicle traveling in the opposite direction
- Lost weight left on the pavement (debris)
- Obstacle on the pavement and walkway (pedestrians, cargo that fell ...)
- Smoke in the tunnel

The alarm should be transmitted as:
- Audible alarm
- Automatic display of images from the camera in alarm
- Automatic start of the recording process of accidental events

The system should also have the ability to generate technical alarms:

- Moving of the camera
- Loss of signal from the camera
- Poor quality of the video signal
- The problem in the network connection

The most important requirements to the system of automatic incident detection are:
- The high rate of detection of incidents
- short detection time
- Low frequency of occurrence of false alarms
- Quick verification of incidents

The system for automatic detection of incidents (AID) in the tunnel consists of a camera for automatic detection of incidents and movable cameras to see the situation in front of the tunnel portal and parking niches in tunnels where such a niche is planned.

Incidents detection cameras should be planned on the vault of the tunnel spaced from 65 to 80 meters. The cameras at the exit of the tunnel are placed in the opposite direction of the light opening of the tunnel entrance in order to avoid the negative effects of high contrast in the image. Movable PTZ (Pan / Tilt / Zoom) cameras must be placed in front of each entry and exit of the tunnel, incorporated on the specific column, or a lighting pole if possible, and set up to provide a clear overview of the situation on the road and tunnel portal. PTZ cameras should enable the rotation along the x-axis and y-axis, and the ability to zoom and focus the image.

Cameras

It is necessary to plan the installation of IP digital video cameras. Video cameras are the basis for designed AID system and as such must meet high standards with the quality of the image:
- Image sensor: 1/3 "color / monochrome CCD or CMOS sensor
- Horizontal Resolution: 520 TV lines
- Sensitivity min. 0.37 lux
- Minimum illumination 0.7 Lux @ F1.4 | 0 Lux with IR lighting
- Focusing System: Automatic or manual
- Infrared day/night color filter for a clear day and good visibility at night in low light and infrared lighting
- Integrated overvoltage protection
- The connection via 10/100 Mbps Ethernet, RJ-45, ONVIF support
- Supported protocols: IPv4, IPv6, TCP / IP, HTTP, HTTPS, UPnP, RTSP / RTP / RTCP, IGMP, SMTP, FTP, DHCP, NTP, DNS, DDNS, PPPoE, CoS, QoS, SNMP and 802.1X

Given the climate mechanical requirements and demands for the high chemical resistance of equipment for external cameras - detection and movable cameras in front of the tunnel portal, camera housing and carriers should be constructed of aluminum with a minimum protection of IP 66.

For tunnel cameras it is necessary to provide housing made of stainless steel and IP66 protection, in which camera with lens is placed, as well as power supply, heater and silica

gel. Carriers of tunnel cameras should be of stainless steel, as well as adequate adapters for mounting brackets on the surface of tunnel lining.

Specific requirement for the cameras:
- Working in a temperature range of -20 ... +40 degrees Celsius

Additional requirements for movable (pan / tilt / zoom) cameras:
- 360º continuous horizontal rotation (pan) and 180 ° vertical (tilt) with the ability to memorize the position
- Control the speed of rotation that allows for smooth rotation and fine control of the position and at maximum zoom (speed of rotation is continuously decreasing with zoom depth)
- Total zoom min 200x (20x optical, 10x digital)
- Able to save at least 10 preset positions

The cameras must meet the following standards:
- EN 550022:1998+A1:2000+A2:2003
- EN 61000-3-2:2000+A2:2005
- EN 61000-3-3:1995+A1:2001+A2:2005
- EN 50130-4:1995+A1:1998+A2:2003
- EN 60065:2002
- EN 50121-4:2006

Optical glass must meet the following standards:
- EN 50130-4: 1995+A1: 1998+A2:2003
- EN 61000-4-3: 2002+A1: 2002
- E 61000-4-2: 1995
- E 61000-4-4: 1995
- E 61000-4-5: 1995
- ENV50141: 1993
- EN61000-4-11: 1994
- EN61000-6-3: 2001
- EN55022: 1998 (ClassB)

The cameras are connected via SFTP cable (halogen-free, fireproof) category 6a to the nearest Ethernet switch of video system located in the road traffic station, substation or communications cabinet in the SOS niche.

The cameras should be supplied with cable NHXH E90-J 3x1.5 mm2 with switchboards for power supply in the road traffic station, substation or communications cabinet or cabinet for low-voltage power supply in the SOS niche. The aforementioned power sources should have built-in protection against electric shock, overcurrent protection and overvoltage protection.

Cables of video system in the tunnel shall be deposited in the HEPD pipes φ40 on the closets in the cable channel for conducting communication installations. In places where the cord exits the installation channels up to the place of the installation of the camera, it should be protected by stainless steel pipes to the entrance in a camera carrier.

Video recording technology

The system should allow recording for seven days of each video signal, at least in the following qualities:
- Resolution: min 360 x 240 NTSC, 360 x 288 PAL
- The number of images in second: min. 5

For the needs of recording incidents, the recording device must be able to write short-term and in higher quality:
- Resolution: 720 x 480 NTSC, 720 x 576 PAL
- The number of images / second: min. 25

Video that is recorded should be compressed using H.264 compression, or the equivalent.
In addition described ability to record, the recording device must have the ability to play recorded material, or the reach of a video of a time interval on request.

Program support

Program support must allow monitoring of all devices on the field through a single interface.

Graphical user interface should provide the following:
- Display of cameras in alarm
- Display of the video of the current alarm in real time
- Turn off and the alarm verification
- Display of any live image
- Display of system alarms

The video signal is transferred to the control center as a Video over IP using an Ethernet network. This transfer method allows you to view video from anywhere in the local network.

The operator must be enabled to choose size of images from certain selected cameras and their arbitrary distribution on the video wall or CCTV monitors.

In the case of receiving an alarm from AID device, software must automatically change deployment as well as image source so that the operator can have immediate clear display of intercepted road where the incident situation was detected.

18.11. Radio communication system in the tunnel

An important factor of tunnel safety are communication and notification systems, which include a radio communication system. The tunnel radio communication is difficult, because tunnels are the shadow zone for propagation of radio waves.
Therefore, inside the tunnel there is not a direct component of the electromagnetic wave, but a multitude of reflected waves, which stifle the basic signal. Thus, the tunnels are equipped with special radio systems, ensuring reliable transmission of radio signals inside the tunnel, as well as unhindered connection with external systems, significantly contributing to the traffic safety.

Radio system should be planned in accordance with the *''Guidelines for the design of equipment in the tunnel RVS 9.282, point 9.5.3 - Tunnel radio*'', *''Radio system in the tunnel RVS 9.286*'', Directive 2004/54 EC of the European Parliament and is planned for tunnels longer than 500 meters.

The main purpose of the radio system in the tunnel is to provide a secure radio communication from the tunnel to the outside and vice versa, as well as mutual communication of radio stations inside the tunnel, for all security services (maintenance, police, fire, ambulance), on their radio frequencies.

A special advantage of this kind of communication is in their independence of public communication, which is especially important in case of an accident in the tunnel, when it comes to public communication network congestion.

In addition, the system should enable the transfer of the program of one or more public radio stations, as well as providing announcements to motorway users, who listen to these programs while driving through the tunnel. Radio system should allow recording of VHF traffic, and messages transmitted through FM broadcasting, which increases the reliability of the system and helps identify errors of operators and security services in the tunnel.

Radio system should enable the retransmission at least for the following radio stations, and two public FM stations, namely:
- 1 channel for police
- 1 channel for the firefighting service
- 1 channel for ambulance service
- 1 channel for tunnel operator
- Two channels for public FM radio

The system should also have the option to upgrade to digital radio communication system, such as TETRA. The system should have the ability of Break-in function for certain channels. Break-in can be performed live or via pre-recorded messages.

Radio system should include the following components:
- Master station for radio services, as well as FM public broadcasters that is installed in the control center
- Remote substations of radio systems that are planned in SOS niches
- Antennas for individual services
- Leaky cable and coaxial cable of suitable length and mounting equipment in an appropriate amount.
- Break-in functionality in some channels, possible control from the control center.

The central part of the system should be placed in COKP. To accommodate the equipment in the tunnel SOS system rooms in tunnel niches are to be used.
For the laying of optical and coaxial cables low circuit cable ducts or pipes should be used,i.e pipes installed below the traffic lanes. Radiating cables are mounted on the wall of the tunnel at a height of 5.30 to 5.50 m.
To supply the radio system, an uninterrupted power supply should be ensured. To connect the central part of the system with tunnel radio substations, single-mode optical fiber cable

should be used.

18.12. PA system in the tunnel

Tunnel PA System is intended to provide necessary information or instructions for users of tunnels, which were stopped in the tunnel in the event of an incident.

It is extremely important to provide a good distribution of speakers, to eliminate reverberation effect and minimize the impact of noise caused by the fan operation and traffic density. Since the noise caused by traffic is a fixed value, and acoustic adjustment of tunnel walls is extremely expensive, a good knowledge of acoustic theory is important in the design of high-quality PA system.

PA system must be sized so that the combination of the speakers achieves sound pressure level of 110 dB (A) at a distance of 3 m in the frequency range from 1 kHz to 4 kHz. PA device consists of amplifier and speaker combination embedded in the SOS niche in the free field of tunnels and pedestrian passages between the two tunnel tubes.

In accordance with the *'Guidelines for the design of equipment in the tunnel RVS 9.282, point 9.5.2. - PA device* '', Directive 2004/54 /EC of the European Parliament, the PA system of the tunnel is installed in tunnels longer than 1000 m, and should include the following elements:
- Management Terminal, located on the control panel in the system room of COKP,
- PA control panel, located in the system room in COKP,
- PA subpanels, located in the tunnel,
- Speakers distributed throughout the tunnel.

Managing PA system should be enabled from the system rooms in COKP, where the operator has a complete overview of the events in the tunnel and out of the tunnel by using microphone console that needs to be planned in every closet of PA substation in the tunnel.

In order to enable covering of the tunnel with audible signal, along the tunnel it is necessary to plan the speakers and the sound columns. Speaker pattern should be planned according to schedule of traffic lights and cross passages in the tunnel, because stopping the vehicle in case of an accident can be expected mainly by traffic lights and along pedestrian passages and inside them.

To connect PA control panel with each PA subpanel in the tunnel, single-mode fiber-optic cable is used, passing along the motorway.

Sound columns, through the terminal box, should be to connected with flame retardant speaker cable 2x4mm2 LSOH with tunnel control subpanels, so that the cable from the sound pole is lead to the cable channel in stainless steel tiles on the tunnel wall.

Low voltage cable 2x4 mm2 must be reinforced, flame retardant (according to IEC 60332-1 and IEC 60332-3 cat. A/), low-smoke (according to IEC 61034), halogen-free, of construction which meets the standards IEC 60092-350 and IEC 60092-353 .

18.13. Telephone System (TS)

Communication of traffic participants with organizations and agencies that provide assistance or provide information, are conducted through a telephone dialing system.

Telephone system on the motorways is defined by the following directives and guidelines;
- Directive 2004/54 / EC of the European Parliament and of the Council on minimum safety requirements for tunnels in the trans-European road network, April 2004,

- RVS 9282 GUIDELINES FOR THE DESIGN OF THE TUNNEL - Operating and safety installations; Tunnel Equipment - Federal Highway Administration of the Republic of Austria, July 2002.

Telephone System (TS) is expected for all tunnels and it consists of TS cells implanted in front of the entry and exit of the tunnel portal and SOS stations in tunnel SOS niches with spacing of 130 - 150m. System is based on TCP/IP technology. All telephone devices connect to traffic information system equipment (the closest Ethernet switch in CPS, CPPS or KS) with SFTP halogen-free cable or MM optical halogen-free cables. Power supply of TS devices in front of the tunnel is done with power cables that connect to the bus bar in cabinets of KS or CPS devices along the route. In SOS niches, SOS phone is powered from the SOS niche distribution cabinet (cabinet connected to UPS) with cable which does not support combustion, and is resistant to fire at least 90 minutes.

System that allows a voice connection with the recommendations of international organizations for telephony and telegraphy, CCITT, consists of:
- Telephone poles and SOS units
- Telecommunication links (optical and SFTP cables)
- Control panel in the center for traffic control and IP phone of the operator

TS system allows:
- Emergency call to the central station of reception
- Receiving a call from the central station of reception
- Holding a call on hold
- Restoring the call on hold
- Termination of calls

Components of TS and SOS units are:

- Call key,

- Electrodynamic microphone,

- Speaker,

- Adaptive and protective elements
- Pipe carrier (for TS unit)

The body of the housing must be done for the higher level of safety for road users, in order to mitigate the consequences of a possible impact in the event of an accident and marked with suitable pictograms for good visibility under the cars lights.
In the same way the relevant pictogram indicates the position of the SOS station in a tunnel.

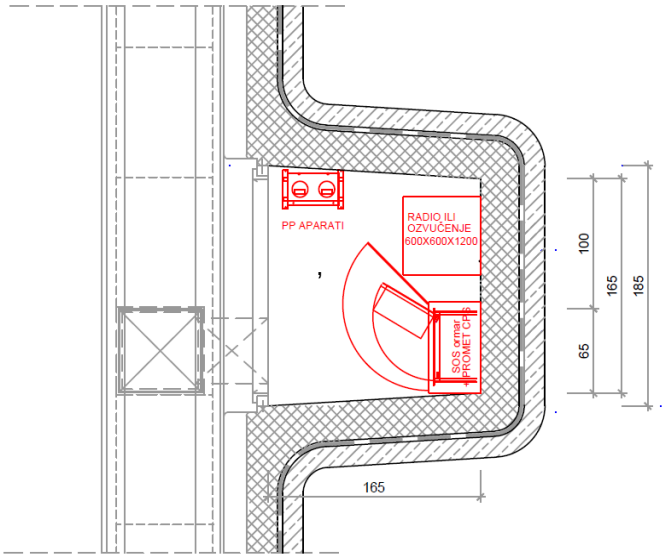

Figure 6 - SOS niche –equipment schedule

18.14. Traffic information system

Traffic information system (TIS) in the tunnel, as part of the traffic information system of a section, has the role of managing variable traffic signs placed in the tunnel and in front of the tunnel portal, using data from other subsystems.

The goal of using Traffic Information System as a system for managing and controlling traffic at the level of the motorway is to increase traffic safety with dynamic response to the current conditions of transport and the environment. Thus the capture of data from traffic and the environment, and performance conclusion suggestions (warning, speed limits) are important functions of the system that influence the level of each section of the motorway.

The normative description of the system for traffic management and control on the motorways is contained in the Guidelines for equipment of variable message signs (RWVA) and the Guidelines for variable message signs (RWVZ) of Germany, which conform to the provisions of the CEN-EN. In tunnels there are local traffic control panels (LTCP) as an integral part of the complex control system - Central remote control system (CRCS).

Road traffic stations (CTS), as the products used in the System of management and traffic control, must match the (appropriate) technical conditions set out in technical guidelines for design and installation of road traffic stations (TLS 2003) of Federal Republic of Germany, including checks and controls carried out in the country of origin, which guarantees that at all described levels of functioning permanently achieve the required level of protection - safety, health and usability - and full system compatibility.

According to the TLS standard, traffic information system should be divided into hierarchical levels:
- Main traffic control panel (MTCP)
- Regional traffic control panel (RTCCP,
- Sectional traffic control panel (STCP),
- Road traffic station (RTS),
- Road traffic substations (RTSS) and
- Terminating equipment (TE).

The highest level of TIS is the main traffic control panel MTCC.

Regional traffic control panels and sectional traffic control panels are to be planned in the Traffic maintenance and control center-COKP.

The communication network which interconnects the main, regional and sectional traffic control panels makes a fundamental communication motorway network and should be realized with Ethernet technology via motorway fiber-optic cable.

The communication network that links regional traffic control panel with road traffic stations on the route and in the tunnel is called local motorway communication network, and also should be realized with Ethernet technology via motorway fiber-optic cable.

Traffic data on relation STCP-RTS are also transmitted with Ethernet technology through motorway local optical cable.

In the road traffic stations, communication modules are installed (CM) that connect to the input-output modules (I/OM) and the Road Traffic substations using the local bus bar. Depending on the distance between the and RTSS, local bus bar is physically realized through multi- mode (MM) or single mode (SM) fiber-optic cable. The optical cable laid for local connections in the tunnel should be halogen-free.

RTSs and RTSSs in the tunnels are installed in SOS niches and, if necessary, and according to construction conditions, in front of the tunnel portal.

The end devices of transport systems that connect to the corresponding RTS or RTSS in the tunnel and in front of the tunnel are the following:
- Variable message signs (light variable message signs, information displays, traffic lane signals)
- Traffic lights and blinkers (TL)
- Signs with internal lighting (SIL),
- Traffic counters,
- AID (Automatic Incident Detection) camera (AID)

Variable message signs

Light variable message signs, information displays, and traffic lane signals in the tunnel should meet the following requirements:

- Compliance with the classes L3, B4, C2, R3, T1, T2, T3 in accordance with EN 12966-1, which the manufacturer proves with a certificate for production technology of the sign that is offered, issued by an authorized certification body for the standard EN 12966;
- Electromagnetic compatibility of the sign in accordance with EN 50293:2000 Electromagnetic compatibility - Road traffic signal systems;
- Electrical safety of the sign provided in accordance with the guidelines of harmonized standards HD 638 and HD 384;
- Housing with level of protection IP 65 made of AlMg3, protection by electrostatic plastic coating, front panel by painting;
- The communication interface for the connection over TCP/IP protocol.

Variable message signs in the tunnel are connected with the closest local device (RTS / RTSS) by Ethernet cable, fire-retardant, halogen-free SFTP of minimum category 6a.
Signs power supply needs to be realized from local device distribution panel or from the low-voltage power distribution cabinet of the nearest SOS niche by cable NHXH-J with proper thickness.
Cables are conducted from the local device to the sign through installation duct in halogen-free PEHD pipes to the point of exit from the channel to the sign, they need to be protected minimum with stainless v4a tiles of appropriate dimensions.

Traffic lights
As signal encoders, it is necessary to provide a standard traffic light lanterns made from black color polycarbonate, resistant to atmospheric influences. The signals for the vehicles are provided with an LED light source. Optics on signals for vehicles must be so constructed as to prevent the emergence of retro-reflection, and 100% leak of light whose source is the in the lantern housing.
Strength, scattering and uniformity of lantern light must comply with EN 12368. Traffic lights power supply needs to be planned from local device distribution panel of nearest SOS niche by cable NHXH-J with proper thickness.

Signs with indoor light
ZUR - traffic sign with interior lighting should be one-sided or double-sided illuminated, for mounting on the wall of the tunnel. The sign should be made of class B1 self-extinguishing polycarbonate. The interior lighting should be performed in LED technology.
The sign housing (IP65) should be made of aluminum, protected by electrostatic plastic coating, front panel painted with matt black color.

The signs must be in accordance with the classes L3, B4, C2, R3, T1, D3 - Vertical traffic signalization - Part 1: Variable message signs, which must be proved by a certificate of manufacturing technology issued by an authorized certification body for the standard EN 12966.

Road traffic stations and substations

Road traffic stations (RTS) and the substations (RTSS) are intended for local management of variable message signs, and the collection of traffic data and weather conditions on the road. RTS/RTSS must be performed in full compliance with the TLS2002 recommendations.

RTS/RTSS should provide collection of data and manage the executive elements locally and over the user interface. RTS/RTSS should be placed in housing with IP 54 protection and designed to operate at temperature range from -20°C to + 60°C.

For overvoltage protection in the CPS/CPPS gas dischargers are put on the main power supply and communication lines need to be protected by coarse (gas discharger) and fine (semiconductor suppressors) protection. Power is supplied from the distribution cabinet for low-voltage power supply of SOS niches, by self-extinguishing, halogen-free cable NHXH of proper thickness.

Software support

The basic software support should include management of devices attached to the RTS through a user interface, and software support for all communication protocols needed for communication with the vehicle detectors, communication with variable signs and communication with the control center.

Communication protocols for variable signs and a master center should be implemented in conformance with TLS. Basic software support upgrading is performed according to the device configuration requirements and configuration requirements within the transport system.

Operating Modes

RTS should work in three basic modes of operation.

a) Local operating mode

The device should operate in local mode for servicing, regular inspection and maintenance. Local mode has the highest priority and cannot be switched off by remote control.

When closing the door of the RTS cabinet, the control switch on the door automatically switches road traffic station to remote operation mode.

b) Remote operating mode

RTS in normal operation should work in the remote operating mode. This operation mode should provide communication between the COKP and the RTS. The communication protocol between RTS and COKP should be realized according to the TLS

c) Automatic operating mode

In case of losing communication with the master control center, the RTS has to switch to the automatic operating mode. In that operating mode the RTS decides by itself about operating mode on the basis of locally collected data. Automatic operating mode is applied only in specific situations, depending on the design solution of the traffic project, and only when there are clearly defined algorithms for that mode. RTS/RTSS must fulfill the following:

- Electrical safety according to EN 60950-1 Information technology equipment - Safety.
- Electromagnetic compatibility according to EN 50293: 2000 Electromagnetic compatibility - Road traffic signal systems.

- In accordance with the recommendations TLS2002 - communication protocol for FG 1; FG3; FG4; FG6; FG254.

Traffic counters

Traffic data are collected at the entrance and exit portal of the tunnel.
Traffic flow measuring is performed for two reasons, namely:
a) The data for the purpose of analysis and short-term forecasts for the traffic conduct
b) Data for statistics and long-term forecasts of traffic
Local traffic data that is collected at the measuring points consists of the categorization of vehicles. The collection of traffic data is performed by sensors that are performed in the technology of inductive loop embedded in asphalt curtain. For reasons of classification of vehicle and direction, at every measuring point two inductive loops are used. Traffic counters can be designed as devices in a separate enclosure or upgrade in a local device RTS/RTSS. If they are designed as separate devices, should be performed degree of protection IP 55. The device should satisfy the electrical safety in conformance with EN 60950-1 - Information technology equipment - Safety Part 1: General requirements. The device should meet the electromagnetic compatibility in accordance with standards: EN61000-2, EN61000-6 and EN55022 class B.

Measuring loops

The collection of traffic of traffic data is performed by *inductive loops* embedded in asphalt curtain. Working classification of vehicles and directions at each measurement site requires two inductive loops. The geometry of the inductive loop installation must be as follows:

- inductive loop width 1.0 m.
- distance from the lane separating line 0.35 m
- distance from the boundary line 0.35 m
- the distance between the head of inductive loops 2.5 m and 1.5 m between loops
- distance to the parallel loop on an adjacent lane min. 0.7 m

Traffic Detector

Traffic detector is a device intended for recognition of individual vehicles. By measuring structure (principle of two loops) and its evaluation it is possible to get the statement about the speed, length and class of a vehicle, and the distance between the two vehicles. Thus established data are collected in protocol and for further evaluation are put at the disposal to the master system. It is recommended to use widely applied geometry of loops according to TLS II:
According to TLS guidelines vehicles are classified in 9 classes:
1) Motorcycles
2) Passenger cars
3) Passenger cars with trailers
4) Buses
5) Small cargo / trailer vehicle
6) Trucks
7) Trucks with trailers
8) Truck, three-axle tank, tow truck
9) Special Vehicles

Software support of Traffic Information System in COKP

Software and hardware support in COKP should enable operators to easily and effectively manage traffic on the section of highway and in tunnels. To achieve this goal it is necessary to meet the following functional requirements:

- Information provided for operator has to be precise, up to date and accurate;

- The execution of commands given to the system gives by operator must be ensured with automatic control mechanism that in the case of unexecuted commands alerts the operator by audible and visual alarm;

- All events detected in traffic information system must be stored in a relational database in a way that allows later events playback, analysis and statistical data processing;

- All conversation that have been made over the SOS call system must be recorded in a way that in case of playback should provide time- and date-based browsing;

- Videos with from all CCTV cameras must record at least 24 hours and all alarm events must be recorded in the highest quality format with the possibility of storing on external media;

- Complete hardware support (computers, central processing units, communication equipment) must be supported by battery backup that allows the autonomy of the system from the time of power failure at least 30 min;

- Complete software support must be designed to allow extension, and adapt to new and additional TIS subsystems;

- Software support for the individual systems must allow data exchange with the TIS central software support;

- Software and hardware support in COKP must be performed so that the boot process is fully automated and does not require any operator activity.

- In case of browsing of the history of events and the state of the system, it must be uniquely determined which operator was logged to the system at the time of particular events.

- When viewing the history of events and the state of the system, it must be clearly specified which operator was reported to the system at the time of particular events.

- Automatic responses system triggered by software support in COKP must be conducted on the basis of algorithms defined in the central software support (TIS SCADA system). It is necessary to ensure that for the implementation of automated algorithms all relevant information can be used about the current status and events regardless of which subsystem generated them.

- COKP that controls tunnels must be additionally equipped with software and hardware support for a functional and ergonomic integration of all subsystems.

The main functional requirements for that system are:

- Relevant information from all subsystems have to be accepted, processed and stored within the software for functional and ergonomic integration

- Display of the status and operation of all subsystems must be enabled through the integration system

- Based on the input data and built-in automated algorithms work integration system must enable operator interaction through a graphical user interface, in the course of performing automatic procedures when estimated by the design

- Integration system has a graphical user interface to enable display of interactive instructions for emergency situations.

18.15. The basic principles of ventilation system design

Ventilation in the tunnel should provide the maintenance of the concentration of harmful gasses within the permitted limits at the maximum intensity of traffic, at low speed driving and at adverse weather conditions. Faults that may occur due to vehicle engine operation are such as danger from poisoning, irritation and reduced visibility. The same system should provide regulation's required conditions in the case of a fire in the tunnel. This means that the ventilation in the tunnel needs to dilute the products of combustion (emissions and solid particles) produced by vehicles in the tunnel to an acceptable level for the users of the tunnel, to prevent excessive pollution of the tunnel environment and to control the spread of smoke in the tunnel in the case of fire or to allow smoke expulsion from the tunnel and fresh air with the aim of safe tunnel evacuation. The smoke caused by fire in the tunnel, in the case when there is no longitudinal flow of air, equally spreads on both sides of the fire on the length of over 700 meters. Smoke lingers in the area over 2.5 m from the road for a period of approx. 8 - 10 minutes. After this period elapsed, caused by cooling, the smoke is mixing with the lower layers of air and after approx. 20 minutes the whole section of the tunnel will be filled with smoke on both sides of the tunnel to a depth of 1 km. In the case of exceeding the permitted level of concentration of harmful gasses and reducing visibility below the permissible limit, as in the case of fire in the tunnel, light signalization will stop traffic in front of the tunnel.

Testing should be carried out for each tunnel where the mechanical ventilation is required. The tunnels, which are temporarily used for two-way traffic, for example as a consequence of the closure of the second tube, are considered to be one-way tunnels.

The principles that should be considered in relation to the ventilation system are:

- In the case of normal operation

  - tunnel users and staff must not have negative effects on health, taking into account the necessary length of stay in all traffic situations that arise during the work,
  - necessary visual field when stopped must be maintained.

- In case of fire

  - Evacuation routes must be free of smoke during the evacuation,

  - Emergency services must be able to use the favorable conditions for a sufficient period of time,

- must be provided reduction of the damage extent (people, vehicles, structures of the tunnel),

- In case of fire in one tube, the second tube is used for the evacuation. In the tube for evacuation, the overpressure must be provided.

If the mechanical ventilation is required, it must be designed to take into account the scenario of a fire, because in one way tunnels on highways,safety in case of fire is only relevant for dimensioning the installation of ventilation. Thus dimensioned ventilation system meets the criteria in terms of CO and solid particles.

Defining the necessary amount of air

Traffic data

Traffic density

Defining traffic density per hour, as a Q_{30} value, is the basis for the calculation of the necessary amount of air. It represents a value that is reached or exceeded for a period of 30 hours per year. This value, as well as the composition of traffic, should be adopted on the basis of studies of traffic forecasts for the section of the road where the tunnel is located. In the calculation, the data for the year of the planned opening of the tunnel should be taken into the account and for a period of ten years after. These data should be compared with a maximum permeation of tunnel tube, so that the results will be flexible ventilation system in the entire period of the tunnel structure life.

Traffic composition

The calculation of exhaust emission is performed by taking into account:

- The percentage prevalence of passenger cars and

- The percentage prevalence of trucks.

The calculation should be performed separately according to percentage representation of each type of vehicle and taking into account the slope of the tunnel with respect to the direction of travel. The specific emissions should be taken from the relevant European guidelines (e.g. RVS).

Traffic conditions

During the calculation, only the normal traffic situation is considered (in $\geq$ 30 km/h), which should be provided by traffic signalization. Slow traffic (v <30 km/h) is not taken into account, unless its occurrence is expected as a regular phenomenon. The average speed in tunnels or tunnel segments with the ascent is necessary to be calculated on the basis of average speed of trucks.

Design thresholds

The required amount of fresh air for mechanical ventilation is defined by described traffic conditions and in accordance with the traffic forecasts study. The following thresholds shall be taken as the basis for calculation.

The CO concentration

The design threshold for the CO concentration is 100 [ppm].

The NOx concentration

During the designing process it is not necessary to consider the emission of NOx, except in the case of explicit request of investors. In this case specific emissions should be taken from the relevant European guidelines (e.g. RVS).

Reduced visibility

The extinction coefficient of $7x10^{-3}$ [m^{-1}] represents a design threshold value of reduced visibility.

The maximum longitudinal velocity

The longitudinal velocity of the air in the tunnel, with the influence of traffic and meteorological conditions, must not exceed value of 10 m/s.

System selection

Key factors in the ventilation systems selection process are cost efficiency and safety analysis during the operation and in case of fire. Economically scheduled service life for electro mechanical parts and fastening accessories is 20 years. Lifetime of tunnel structure can generally be considered as period of 80 years.

Selection criteria

The criteria to be considered are:

- Type of traffic (one-way, two-way, occasionally two-way,...)

- Tunnel structures conditions (length, inclination, cross-section, the escape routes ...)

- Environment condition (immission, safety measures ...)

Traffic type criteria and tunnel structures conditions criteria

The system of longitudinal ventilation for one-way tunnels is allowed, depending on the length of the tunnel and traffic density, according to the following table:

Annual average daily traffic intensity per traffic lane [motor vehicles / day]	Tunnel length [m]	Type of ventilation
Regardless	≤ 500	Natural ventilation
<5000 and a low frequency of congestion	≤ 700	Natural ventilation
≥ 5 000 to <10 000 and the fundamental frequency of congestion	500 to ≤ 3 000	Longitudinal ventilation
≥ 5000 and high frequency of congestion	500 to ≤ 1500	Longitudinal ventilation

For tunnels with higher values, system of longitudinal ventilation is not allowed. Low frequency of congestion is taken into account for the default congestion value which is less than 25 hours/year and refers to the tunnels and the surrounding sections of road that are efficient enough and have no indication for any specific causes of traffic congestion.

Main frequency of congestion is taken into account for the default congestion value which is in the range of 25 - 75 hours/year and refers to the tunnels and the surrounding sections of road that in the standard scenario are sufficiently effective, and only occasionally overloaded (festive congestion and occasional congestion during the holiday season).

High frequency of congestion is taken into account for the default congestion value which is higher than 75 hours/year and refers to the tunnels and the surrounding sections of road that are often congested as a consequence of daily traffic.

As a congested hour is considered delay longer than 20 min/h.

Environment condition criteria
If the portals are positioned in the area with much more stringent requirements in terms of protection from immissions, a ventilation system must be particularly considered.

Ventilation systems

Ventilation systems should provide a solution which is acceptable from a technical, economic and security aspects. Ventilation systems are different in terms of operation mode and possible applications.

Longitudinal ventilation

In the case of longitudinal ventilation longitudinal air in the tunnel is formed naturally or with the help of fans. The conditions that must be observed in this regard are:

- The maximum longitudinal speed in the light cross section;

- Fans should be made in a reversible implementation, so that they can provide an air flow speed of 2 m/s or 120 m^3/s air flow volume in case of fire. Decisive here is the less favorable value;

- Arrangement of fans should be along the entire length of the tunnel, in order to increase the safety in case of fire and reduce turbulence;

- Each fire compartment should have at least two fans.

Semi-transverse ventilation

In the case of semi-transverse ventilation, the air supply is performed through tunnel portals, while the exhaust air is sucked over the ceiling of the tunnel and through air ducts ejected outside the tunnel. Until now, construction of tunnels which require above mentioned ventilation system has not been planned. If the need arises for mentioned ventilation system, the conditions that must be met are necessary to be taken out from relevant European guidelines (e.g. RVS).

Transverse ventilation

In the case of transverse ventilation, the air supply is performed along the tunnel tubes, and exhausted air is sucked along the tunnel tube and ejected out of the tunnel. Until now, construction of tunnels which require above mentioned ventilation system has not been planned. If the need arises for mentioned ventilation system, the conditions that must be met are necessary to be taken out from relevant European guidelines (e.g. RVS).

Technical requirements

In the case of longitudinal ventilation and risk classes I to III, the temperature stability of fans of 250°C for a period of 120 minutes is sufficient. For risk class IV, necessary temperature stability of ventilator is 400°C for a period of 120 minutes (tunnel risk assessment procedure should be performed according to the RVS 09:02:31 (12/08). In the case that the deviation of individual tunnel tube length is greater than 10%, risk assessment procedure should be performed for each tunnel tube).

The fan housing, fixing set and noise silencers should be made of corrosion-resistant material or be protected by anti-corrosive coating. The fan housing should be made of steel sheet with a minimum thickness of 6 mm, and sound silencer housing should be made of steel sheet with a minimum thickness of 3 mm in accordance with ISO 1461.

The fan enfine and connection box must be performed by a minimum of IP 65. Fan electro-engine should be equipped with coil heater. Tunnel fan must be CE marked and comply with BAS EN 12101-3. Characteristics of fans must be in accordance with ISO 13350. The impeller should be made of aluminum alloy, factory-tested in accordance with ASTM E155-05 and balanced in accordance with ISO 1940-1 (minimum level, which should be satisfed is G6.3). The minimum tensile strength of the impeller with the vanes should be higher than

100 MPa at 250°C. Fan suspension should be designed to mitigate vibration. It is necessary to additionally ensure the fan against falling with the steel cord that is attached to specific carriers. Fallout of one fan must not have an impact on other fans.

Since the tunnel fans are the dominant consumers of electrical energy, in tunnels as well as on whole route of the highway, when selecting type of fan, a special attention should be devoted on installed power of fan electro-engine. With the purpose of uniformity of fan type, it is necessary to consider the fans with a rotor diameter between 1250 mm and 1400 mm. In accordance with the adopted light profile of the tunnel, fans with rotor diameter 1250 mm should be planned for individual installation or for installation in pairs, but fans with rotor diameter 1400 mm should be planned for individual installation.

Aerodynamic calculations

The required air amount for ventilation is used as the basis for the aerodynamic calculation. The drop of the pressure in the tunnel tube (or impulse force which defines concept of ventilation), type and number of ventilator are the result of the calculation.

For the calculation of the pressure drop the following parameters and effects must be taken into account:
- the required amount of air,
- meteorological conditions on the micro-location (difference between barometric pressures, impact of wind, thermal conditions ...)
- Structural impacts (portal shape, built-in elements in the tunnel, ...),
- Traffic data,
- The piston effect caused by the movement of vehicles,
- The case of fire. For tunnels with longitudinal slope <3%, two traffic lanes and a standard cross-section of the tunnel, as projected fire a fire that engulfed a truck and two passenger vehicles is adopedt, of 30 MW power and is resulting with amount of flue gases of 120 m^3/s). In this case the length of the fire sector of 800 m is adopted and a rise in temperature in the fire sector of 65 K,
- The position of fans,
- Cost-effectiveness of the system.

The jet fans should be distributed so as to obtain optimum thrust in the tunnel cross-section. Thrust reduction due to the fan position in the zone of hot exhaust gases must be taken into account. Mutual influence between the fans should be avoided and if this is not possible, this loss must be taken into account. When defining the number of fans, it must be taken into account the assumption that the fans in the fire zone will not be fully operational or will be completely non-functional. In the case of the tunnel with complex structural conditions or at projected high fire loads, proven 3D computer software can be used as a back-up for fire test.

Management and operation of the ventilation system

The ventilation system must be operated in accordance with economic criteria, taking into account safety in normal operation and the case of fire. The system must work be automatic but must be provided along with the capability of manual intervention at all operating conditions.

The measured values and the data

The data that must be measured and recorded during management and optimization of ventilation systems are:

- The concentration of CO,

- Visibility (in and the out of the tunnel),

- The longitudinal air flow velocity,

- Airflow direction,

- The number of vehicles in the tunnel (for each tube)

- Vellocity of the vehicle (for the each tube)

- Detection of congestion,

- Vibration on the fan.

Limits for closing and the re-opening of the tunnel

The tunnel is automatically closed in the cases when:
- CO value ≥ 100 ppm for the a period longer than ten minutes
- CO value ≥ 150 ppm
- Visibility coefficient (extinction) ≥ $12x10^{-3}$ m^{-1} for a period longer than one minute

The tunnel opens automatically in the cases when:
- CO value is 90 ppm, or
- Visibility coefficient (extinction) $7x10^{-3}$ m^{-1} for a period longer than one minute and the has a downward trend.

Theoretical values during normal operation
- Theoretical CO value is 30 ppm
- Theoretical value of blurriness is $4x10^{-3}$ m^{-1}
These values should be harmonized with economically acceptable mode of operation.

Limits during servicing
- CO value is 20 ppm
- The value of blurriness is $3x10^{-3}$ m^{-1}
The regulations dealing with occupational safety must be taken into account.

18.16. The used regulations and standards

- Regulations of technical norms for electric power plants with a nominal voltage above 1000V (SFRY no. 4/74)
- Regulation on technical norms for the protection of low voltage networks and associated substations (Official Gazette of SFRY no. 13/78)

- Regulation on technical norms for the low voltage electrical installations (Official Gazette of SFRY 53/88)
- Technical recommendations for the electric power cables of rated voltage from 1 to 35 kV, (Elektroprivreda BiH, 1997)
- Technical recommendations for the application of basic grounding conductors and potential equalization in buildings and the transformer stations, (Public utility company Elektroprivreda BiH, 1983)
- Directive of the European Parliament regarding safety in tunnels in trans-European road network 2004/54 / EC
- Set of guidelines for the design, procurement, installation and maintenance of motoray elements, structures or their parts (Public company Motorways of FBiH 2012)
- European standard for lighting systems in tunnels EN /CR 14380 - Annex A2
- The Austrian national guidelines for the equipping tunnels RVS 02.09.22
- Austrian National Guidelines for the ventilation of tunnels RVS 02.09.31
- The Austrian national guidelines for the calculations of the tunnel ventilation system RVS 02.09.32
- German national guidelines for the equipping and the management of road tunnels RABT
- Standard of functionality of fireproof systems DIN EN 4102-12
- Standard of equipotential connection of electrical equipment DIN EN 61573

19. INSTRUCTION FOR DESIGN AND CONSTRUCTION OF SUSTAINABLE DRAINAGE SYSTEMS ON MOTORWAYS IN FBiH

List of figures

List of Tables

General information on the project

Title of the project: ‘’ Guidelines for design and construction of sustainable drainage systems on motorways in FBiH’’

Contract authority: Public Company Motorways of FBiH d.o.o. Mostar
Seat Mostar: Braće Fejića bb,88000 Mostar, BiH
Office Sarajevo: Dubrovačka 6,71000 Sarajevo, BiH

Contractor: University in Mostar
Trg hrvatskih velikana 1,88000 Mostar, BiH
In cooperation with*:*
Hydro Engineering Institute of the Civil Engineering Faculty Sarajevo d.d.
Stjepana Tomića 1, 71000 Sarajevo, BiH

Project Participants:
Project leader*:* prof. dr Zoran Milašinović, B.Sc.C.E.
Project team: Haris Kalajdžisalihović, B.Sc.C.E.
Boris Čutura, B.Sc.C.E.
Lejla Kukavica, B.Sc.C.E.
Goran Bosankić, B.Sc.C.E.
Dino Delibašić, B.Sc.C.E.
Muhamed Vajnaga, B.Sc.C.E.
Adnan Topalović, B.Sc.C.E.

Introduction

Motorway drainage is dealt with in the "Guidelines for the design, construction, maintenance and supervision of roads, Sarajevo / Banja Luka 2005" (hereinafter "the 2005 Guidelines"), which set out the basic technical requirements and requirements to be followed in the design stage and construction of the drainage system. Main technical requirements and conditions in the field of water drainage from the motorway, which were processed in the mentioned 2005 Guidelines, are presented in the following volumes:

- Volume I - Designing, Section 1: Road designing, Part 6: Road and environment;
- Volume I - Designing, Section 1: Road designing, Part 7: Road structural elements;
- Volume I- Designing, Section 2: Designing bridges, Part 5: Drainage and piping of road structures;
- Volume I - Designing, Section 3: Designing road structures, Part 2: Culverts;
- Volume II - Construction, Section 2: Special technical conditions, Part 4: Drainage;
- Volume II - Construction, Part 3: Special technical conditions for tunnels;

Considering that these volumes do not fully process and clearly define area of rainwater drainage management on the motorway, and taking into account the fact that during the construction of motorways new experiences were acquired, this document amends the existing "2005 Guidelines ".

Accordingly, the objective of the Guidelines for the design and construction of sustainable drainage system on the motorways in Federation of BiH (the "Guidelines") is to create a unique concept of rainwater management through the introduction of a comprehensive approach in the design and construction of the drainage system, with the application of existing legislation, the applicable relevant standards and regulations, as well as examples of the most advanced experiences in Europe and the world.

In accordance with the terms of reference[7] for the development of the "Guidelines", the definition of appropriate rainwater drainage system (SuDs - Sustainable Drainage Systems) is dictated by the application of reference standards and regulations, with respect to current legislation.

[7] Terms of reference for development of Guidilines for design and constrution of sustainable drainage systems on the motorway in FbiH, March 2014

Terms of Reference7 states that "Guidelines" should define the type, conditions, method and principle of operation of SuDs system bearing in mind the following:
- Individual approach to solving problems of drainage and waterproofing in the function, the type and geometry of the highway structures (route, bridge, tunnel, passage, etc.);
- Hydrogeological characteristics of the terrain and the degree of sensitivity of the area, which is very important in terms of defining the level of protection of the water environment in the Federation of BiH;
- Spatial distribution and position of all elements of drainage system and waterproofing (gullies, manholes, collectors, open channels, sand filters, drainage, equipment for quality control of pollution from the road, etc.) on the motorway;
- Recommended materials and dimensions for all elements of the drainage system and waterproofing, depending on the expected (potential) static and hydraulic load and resistance to external influences (climate, pollution emissions, etc.);
- The effectiveness of individual pollution control measures in order to preserve the water environment;
- The protection against accidental contamination. For this purpose, it is necessary first to analyze the occurrence probability and the size of the impact of accidental pollution depending on the degree of sensitivity of the area, and then use the methods of optimizing the selection of the corresponding SuDs concept.

Due to the complexity of the motorway, there are different types of motorway drainage system, and this document deals individually with drainage systems according to the type of motorway structures for the following:
- The route;
- Structures (bridges, viaducts, overpasses, underpasses, etc.) and
- Tunnels.

19.1. Rainwater drainage from the motorway route

Drainage of rainwater from the motorway can be achieved using the following rainwater drainage systems:
- The system of external drainage;
- The system of internal drainage or
- Combined system.

External drainage system serves to protect the motorway from the rainwaters flowing from the surrounding terrain (escarpment, cuts, etc.) or from flood waves of existing water flows along the motorway route.

Internal drainage system is used for collecting and draining rainwater from the motorway pavement and / or drainage of the motorway structure.

The combined drainage system represents a combination of rainwater drainage system of external and internal drainage.

19.1.1. Project criteria

19.1.1.1. Rainfall Return period

Hydrologic analysis and calculations in the framework of the planning and design of motorways serve to determine the runoff of rainwater to be collected and taken to the drainage systems. Drainage systems are designed to take the relevant amounts of rainwater and thus reduce the risk of flooding. The relevant amounts of rainwater design are determined by the optimal level of protection of the motorway structures.
Basic hydrological parameter that is required for design of rainwater drainage system is the intensity of rainfall for a certain rainfall return period (Table 1).
European Standard BAS EN 752: 2010 gives the requirements for protection against flooding which are recommended for the design of new and existing drainage systems.

Table 1: Rainfall return period used to design rainwater drainage (BAS EN 752:2010) for different locations/structures

Frequency of rainfall - the return period (1:n years)	Location	Frequency of rainfall - the return period (1: n years)
1:1	Rural areas	1:10
1:2	Housing areas	1:20
1:2 1:5	Urban centers, industrial and commercial zones: - with analysis of the frequency of flooding -without analysis of the frequency of flooding	1:30 -
1:10	Underground road structures, underpasses	1:50

Frequency of rainfall (return period), which is used for the design of a drainage system on the motorways is in the occurrence range of 1: 5 years, without an analysis of the frequency of flooding.

19.1.1.2. The calculation of the relevant flow

Relevant flow (Q) is calculated for the purposes of determining the hydraulic load of the drainage system for the design of geometric system elements (bottom slope, the cross-sectional geometry).

For the calculation of the relevant flow of water from the pavement, a variety of methods can be used. For practical calculations it is recommended to use rational methods. The assumption underlying the application of the rational methods is that the relevant flow is realized when time of concentration t_c is equal to the duration time of rainfall t_k.

Time of concentration (t_c) is defined as the time it takes rainfall drops at the furthermost point of the basin to get to the project point / profile, or the time from the start of rainfall to the moment when the entire water catchment area at the same time contributes to the runoff on the profile.

Time of concentration (t_c) is equal to the sum of: the time it takes rainfall runoff to enter the drainage system network (t_o), the longest travel time of the runoff through upstream network sections (L_i/v_i) and travel time through the section for which relevant flow is calculated :

$$t_c = (t_o + \sum_i \frac{L_i}{v_i}) + \frac{L}{v} \qquad (0.1)$$

The calculation of the relevant flow by a rational method is iterative. For the calculation of the concentration time t_c, it is necessary in the first iteration, to assume the speed v in the section for which relevant flow is calculated. Based on the calculated concentration time t_c , relevant flow Q is calculated in the following form:

$$Q = i_e \times F \qquad (19.1..2)$$

$$i_e = C \times i_k \text{ za } (t_k = t_c) \qquad (19.1.3)$$

where:
F - Total upstream area from which rainwater runoff reaches the considered section;
C - Coefficient of runoff;
i_e - Relevant rainfall intensity.

Based on the calculated flow, design elements are adopted: the geometry of the cross and longitudinal slope of the section, whereby it is necessary to consider hydraulic, geometric and engineering constraints. Subsequent re-calculation of the flow rate is carried out and a new iteration of the calculation with a corrected time of concentration (t_c), or new duration and intensity of rain (t_k= t_c). Drainage system catchment area (internal and external drainage) is determined using a Digital Terrain Model (DTM) and / or topographic maps.

19.1.2. External drainage system

External drainage system of rainwater from the motorway route involves collecting and draining rainwater from the surrounding terrain along the motorway route (escarpment, cuts, verges, drainage of water from the embankment of motorway route, etc.). For this purpose it is necessary to anticipate the construction of the perimeter canals along motorway route, which take in the rainwater. Draining the perimeter canals can be made in the culverts that are below or near the motorway structure or directly into water flows they are located near the motorway. Drainage of canals and culverts is done through open channels and / or collectors to the nearest appropriate recipient.

External drainage system plays a role in protection against waters which gravitate toward the motorway structure from the corresponding catchment areas. Construction of external drainage system contributes to stabilization of the motorway structure, eliminating erosion,

preventing various negative impacts of construction through the application of best water management practices, such as minimizing surface runoff, increasing land infiltration capacity, regulating the water flow etc. The design of the external drainage system needs to comply with all the conditions and requirements set forth in the "2005 Guidelines,"[8] and chapter 20.1.1 of the "Guidelines".

Material properties for open channels, gutters and channels that are in the berms, which are used for drainage, are listed in the " 2005 Guidelines".[9]
It is important to emphasize that for the design and construction of the drainage system for monolithic and prefabricated concrete system elements, a class of concrete strength C35 / 45 is to be selected, which is prescribed by the European standard BAS EN 1433: 2005. To define other requirements (resistance to frost, salt, dimension deviation, etc.) the "2005 Guidelines," [9] are to be applied as well applicable regulations which prescribe specified parameters.[10]

19.1.3. Internal drainage system

Internal drainage system of rainwater from the motorway route involves collecting and draining rainwater from the motorway carriageway. In the internal drainage system, rainwater from the pavement is accepted through longitudinal concrete gutters or concrete segmental channels. Accepted waters are brought to the gullies, which are positioned in the gutters / concrete segmental channel. Gullies are linked / connected to the main collector of the internal drainage system, which drains collected rain water out of the motorway zone.

Cross and longitudinal pavement slope is of great importance to collect rainwater from the pavement. It is therefore essential that in addition to other conditions, drainage conditions to be one of the criteria for the definition of geometrical parameters of motorway route.
Within the observed return period, internal rainwater drainage system from the pavement shall be designed so that the water from the road by the shortest route and without retention drains out of the motorway zone.

19.1.3.1. Variant solutions of the internal drainage system

Depending on the position of collector of internal drainage system, rainwater collection and drainage from the motorway carriageway cab be applied in two versions:

Version I – The collector of the internal drainage system is located in the central reserve (Figure 1), while collecting of water runs through the gullies that are connected to the collector or inspection chambers. The position of the gutter depends on the cross slope of the carriageway. In the case of the cross slope of the carriageway to the central reserve, gullies are located along the central reserve (with the main collector) and are directly connected to the collector and / or inspection chambers. In the case of the cross slope of the carriageway to shoulder zone, gullies are located on the opposite side of the central reserve (in shoulder zone), and their connection to the collector is done with pipes passing through

[8] Volume I-Designing, Part I- Road design, Chapter 7: Constructive road elements
[9] Volume I-Designing, Part II: Special technical conditions, Chapter 4: Drainage
[10] Currently, this area is regulated by: Rules on technical regulations for construction products installed in concrete constructions (Official Gazette of FBiH No. 86/08)

the structure of the motorway. The pipes that pass through the structure of the motorway (cross connection pipe and cross-connection of collector) must be carried out in a way that includes the creation of concrete base and reinforced concrete (RC) coating around the pipe. To create a concrete base, concrete strength of class C25 / 30 is used, while for the production of RC coating, in addition to concrete of strength class C25 / 30 around the pipe, it is necessary to use wire mesh Q 188 and reinforcing bars / anchors Φ12 mm.

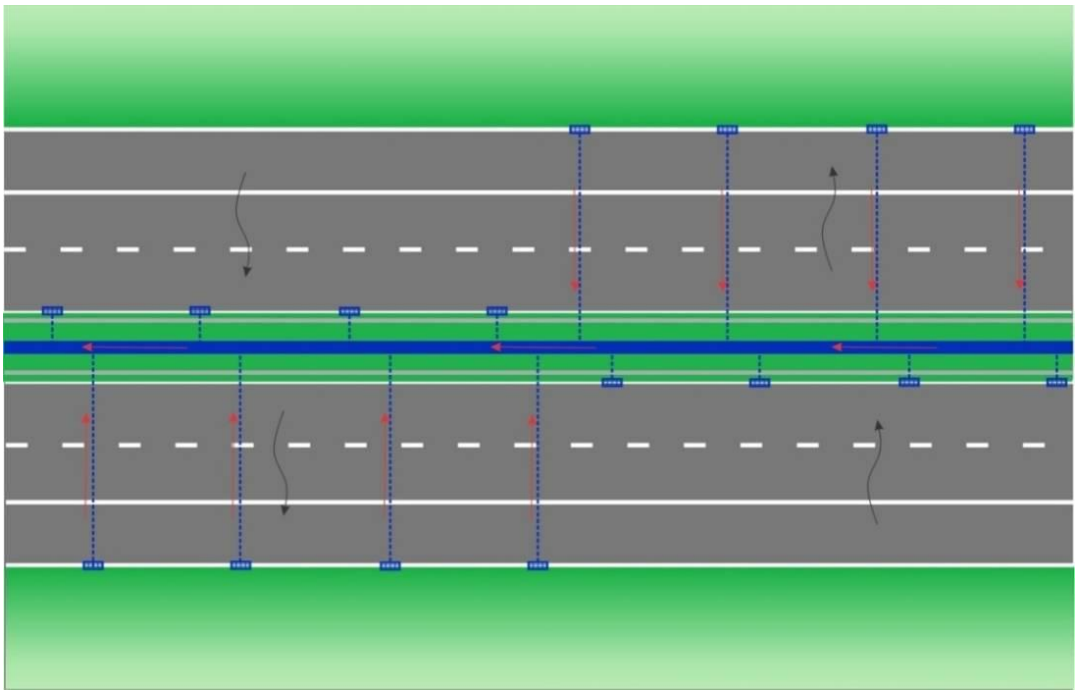

Figure 1: Internal drainage system – Version I

When choosing this solution, the section of the main motorway route with cross slope toward the shoulder, canals running through the motorway structure are planned at the distance of the space between the gullies, and accordingly, the system consists of collectors and a number of individual secondary collectors (cross-linking). In places where the pipes of cross-link and collector connect (via the "saddle") the two-sided inspection of the ross-link pipe is prevented, which in the phase of exploitation of the system makes it difficult to maintain the system. In the case of selection of this variant solution, it is necessary to avoid joining / merging of cross-link pipes directly to the collector (via the "saddle"), it is necessary to make the connection at the place of an inspection chamber, with the aim of facilitating the maintenance and management of the drainage system.

Version II – The collectors of the internal drainage system are located in the central reserve and shoulder zone of the motorway route (Figure 2). In this case, the collection of water from the pavement is carried out using the gullies which are directly and / or via inspection chamber connected to the collectors. Connecting or merging collector from central reserve and shoulder zone is made in places of inspection chambers before emptying the water from collector into water protection system. Collector sections passing through the motorway structure (for connecting collectors in the central reserve and shoulder zone) are derived from the concrete base and RC coating around the pipe. The materials used for making concrete base and RC coating are the same as in Version I (concrete C25 / 30, Q 188 wire mesh and reinforcing bars / anchors Φ12 mm). The advantage of this variant solution in respect to Variant I is reflected in

the connection of all gullies to the collector located in the immediate vicinity, which ultimately eliminates the need for carrying out a large number of cross-links in motorway structure. Due to the elimination of a large number of cross-links in the motorway structure, greater structural stability and functionality of the drainage system are ensured , and the likelihood of occurrence of deformation and fracture of pipelines is reduced.

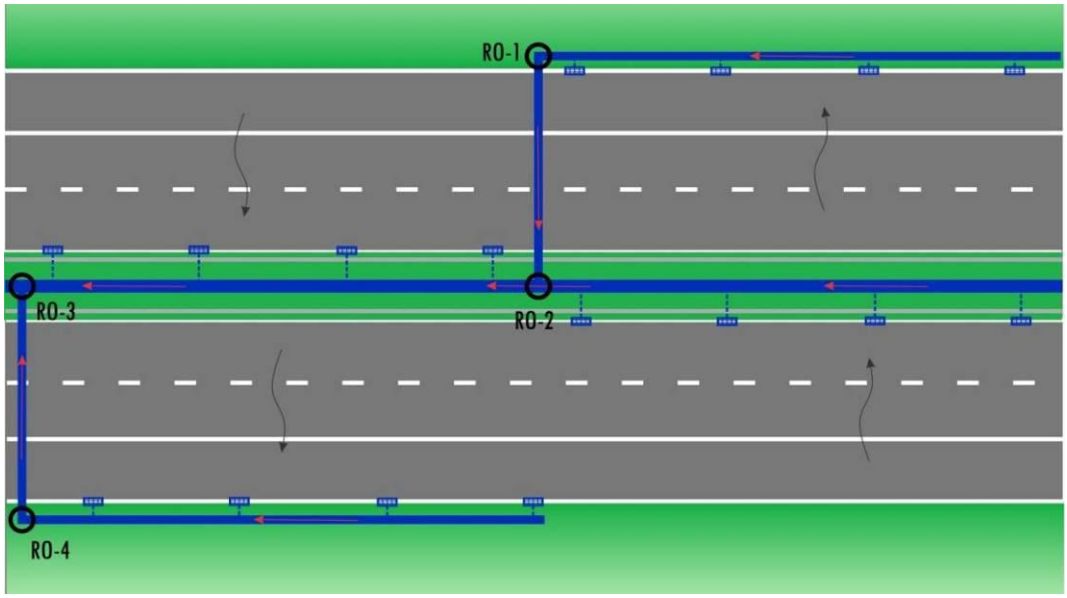

Figure 2: Internal drainage system – Version II

When designing the internal drainage system, Version II is recommended, for the above reasons, but also because the maintenance and management of the system is significantly easier and there is less possibility of compromising the functionality of the system in the exploitation phase of the motorway. Investment costs for planning and construction of versions I and II are about the same order of magnitude.

19.1.3.2. Internal drainage system elements

Elements of internal drainage are:
- Gutters and concrete segmental channels;
- Gullies;
- Manholes / inspection chambers;
- Collectors / pipelines.

The following will describe each of these elements of the system, and provide an overview of existing, relevant standards and regulations.

<u>Gutters and concrete segmental channels</u>

Gutters and concrete segmental channels are used for drainage of water that falls from both, or only one side of the motorway carriageway. Dimensions of cross-section of gutters and concrete segmental channels need to be hydraulically determined. Longitudinal slope of gutters and concrete segmental channels should be equal to the longitudinal slope of the carriageway, subject to the conditions under which the minimum value of the longitudinal

slope of gutters should amount to 0.5%. If the longitudinal slope of the carriageway edge is less than 0.5%, the required gradient in the bottom of gutters should be provided with alternative amendments to the bottom of the gutters.
Sizing of gutters and concrete segmental channels is discussed in detail in the "2005 Guidelines " 8. On the other hand, the requirements that must be taken into account during the construction of gutters and concrete segmental channels are also analyzed in detail in the "2005 Guidelines "9.

Gullies

Gullies have a direct function of collecting water from the motorway carriageway. Distance between the gullies and the gully efficiency needs to be determined with the appropriate hydraulic calculation. Because of the unification of shapes and dimensions of the prefabricated gullies and for simple and easy installation, it is necessary to carry out the installation of the prefabricated gullies.

Gullies (gully pots) should have sedimentation tanks with minimum depth of 100 cm, if the inner diameter of the gully pot is DN / ID 400 mm and sedimentation tanks of minimum depth of 50 cm, if the inner diameter of the gully pot is DN / ID 500 mm or more.

There are several types of gullies, which are in standard use for the collection of water from the carriageway:
1) The gullies in the gutter that are placed along the curb
a) Openings parallel to the curb;
b) Openings vertical to the curb;
2) Gullies with the holes in the curb
3) Combined curbs;

To drain water from the motorway carriageway gullies in the gutter are most often used, which are placed along the curb. Lack of gullies that are made with holes in the curb means bigger flooding surface and increased maintenance costs. Accordingly, in designing the internal drainage system for collecting water from the carriageway highway, it is necessary to choose the type of gullies in the gutter that are placed along the curb.

Calculation of gully efficiency

Receptive power of the gully (Q_i) depends on the type of gully, its geometry and the speed of water flow which goes toward the gully. Efficiency of the gully E is defined as the ratio between the flow that the gully receives and the incoming flow that reaches the gully running along the curb: $E=Q_i/Q$.
The efficiency of the gully depends on:
- Elements of the route geometry (longitudinal Sp and cross slope Sx);
- Type of gully and geometry (width w and length L) and
- Incoming flow Q.

When calculating the efficiency of gully on the motorway, it is necessary to calculate the part of the flow that frontally faces the gully width w (Q_w) and the remaining, side part of the flow, which is moving parallel to the inside edge of gully (Q_s):

$$Q_W = Q \times E_0 \tag{19.1.4}$$

$$Q_s = Q - Q_W = (1 - E_0) \times Q \tag{19.1.5}$$

Calculation of the parameter E_0 (dimensionless size which accounts part of the total flow of the frontal faces of the gutter width w) for the case where the carriageway is in a constant cross slope which is done based on the following form:

$$E_0 = 1 - (1 - \frac{w}{b})^{8/3} \tag{19.1.6}$$

where:
b – is allowed width of flooding (m);
w - the width of gully (m)

Part of the flow accepted by the gully (Q) depends on the reception efficiency of the frontal (R_w) and lateral inflow (R_s):

$$Q_i = R_w \times Q_W + R_s \times Q_s \tag{19.1.7}$$

$$E = R_w \times E_0 + R_s (1 - E_0) \tag{0.8}$$

Reception efficiency coefficient of the frontal inflow (R_w) is made based on the following formula:

$$R_W = \begin{Bmatrix} 1 - 0{,}295(v - v_0) & v \geq v_0 \\ 1 & v < v_0 \end{Bmatrix} \tag{019.1.9}$$

where:
v - speed of the flow Q that reaches the gully;
v_o - the maximum speed, whose overcoming reduces the effectiveness of gully.

The efficiency coefficient of lateral inflow reception (R_s) is determined by the following formula:

$$R_S = \frac{1}{1 + \frac{0{,}0828 \times V^{1,8}}{S_x \times L^{2,3}}} \tag{0.10}$$

Determining distance between the gullies

It is obvious that there is a part of the flow a gully can not accept:

This flow should not be higher than 30% of the flow directly in front of the gully - Q, and most importantly, gullies should be placed at such a distance (L_s) that this flow does not increase:

$$L_s = \frac{Q_i}{B \times C \times i_k} \tag{19.1.11}$$

where:
B - width of the roadway from which rainwater runoff is collected (m),
i_k - relevant precipitation intensity (m / s) and
C - coefficient of runoff (-).

Determination of the distance between the gullies is clearly an iterative process, because the intensity of precipitation depends on the duration of the rainfall, which again changes depending on calculated travel time of rainfall runoff to the gully (t_0). Where the route geometry changes (intersections, loops, changing the cross and longitudinal slope) it is necessary to set up additional gullies for acceptance of the flow (Q_b) not accepted by the last gully in a series.

Joining gullies to the collector

In the case of Version II (Figure 2), joining gullies to the collector can be made directly because the length of the connecting pipes is insignificant, and it can be smoothly maintained.

In order to ensure water tightness at the connection of the gully to the collector pipe, connection is to be performed using the original connecting pieces ("saddle"). Those original connecting pieces ("saddle") must be of the same material as the collector pipe to which the joining of the gully is performed. Also, it is important to emphasize that "saddles" for connection of the gully to collector are chosen depending on the diameter of the gully connecting pipes and collector pipes and connecting angles of the gully to collector pipes (90˚ or 45˚).

Connecting the gully connecting pipes with inspection chamber is to be achieved using a connection adapter. Also, if the gully pot does not have prefabricated joining of the parts of connection pipes (length 20 cm), connection between the gully pot and the connecting pipe is to be achieved using a connection adapter.

For collector pipes of diameters DN / ID 300 mm it is recommended to connect the gully to the collector via inspection chamber, rather than directly on the collector pipe. In this case mutual joining of two gullies can be made (selected diameter of the gully pot of DN / ID 500 mm), so that each second gully is connected to the inspection chamber of the collector.

Installing gullies

During the installation of gullies, it is necessary to carry out testing of compaction of the trench bottom, where the ground on which the gully is implanted must have Evd≥45 MN / m2. Gully pot is installed on a concrete base, which is 10 cm thick, under which previously made sand crib was made of a minimum thickness of 10 cm. Backfill around the gully to the ground level is made with bund and tampon material in layers of 30-50 cm with stamping up to the required compaction.

Gully pots have circular cross-section. Completion of gully pot is performed in a way that the installation of two reinforced concrete rings in two levels is done around the gully pot (Figure 3).

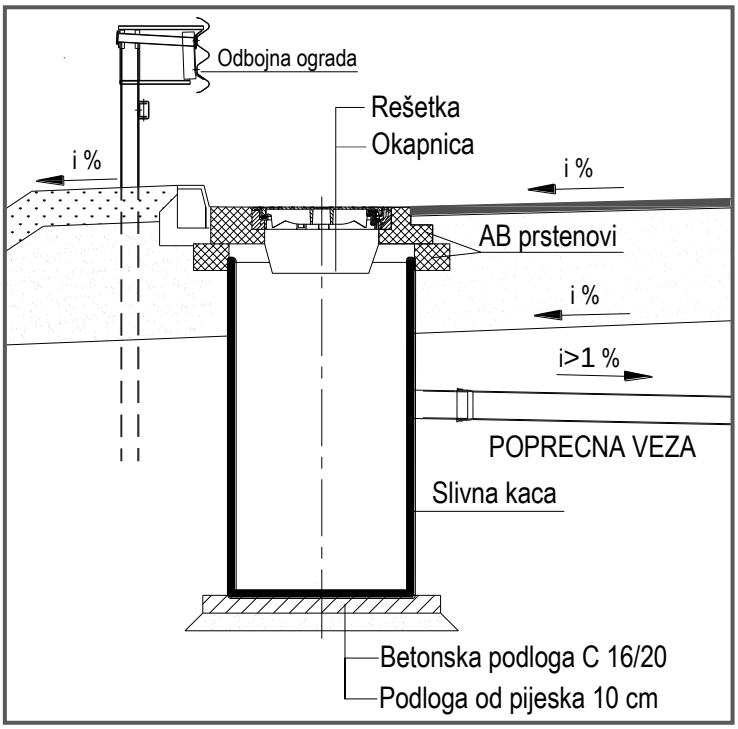

Figure 3: Detail of a gully

As can be seen from the previous figure, the lower RC ring *(AB prstenovi*) is 15 cm wider than the upper AB ring, which is installed in the frame of the gully grating. Thickness of RC rings should be at least 15 cm. Based on the above, the gully consists of the following components: gully pot (body of gully pot) *(Slivna kaca),* RC rings (AB prstenovi) and grating (rešetka). Since the gully pot is not made compactly from one part but out of gully pot body and RC rings, it is necessary to achieve a watertight connection between all these parts. Waterproofing is achieved using appropriate sealants.
To avoid pouring of water between the gully pot and RC rings it is necessary to plan for the installation of "drip edge" *(okapnica)* on the top RC ring. The said "drip edge" can be made of thermoplastic materials or concrete. The aim of the installation of "drip edge" is to prevent water penetration from the outside of the gully pot in the case where less water flows in the gully.

The material used for the production of RC rings is the concrete strength class C35 / 45, resistant to frost and salt and reinforcement of minimum diameter Φ12, distributed in both reinforcement zones. These reinforcing bars can be used in the case where the gully is located outside carriageway, while in case of gully exposure to traffic load it is necessary to calculate capacity of rc rings (gullies), and in accordance with the calculation, determine the reinforcement and its dimensions.

Inspection chambers/manholes (RO)

Inspection chambers/Manholes are structures to ensure technically correct connection and turning of the collector, as well as changes in the longitudinal gradient and diameter of the collector. Also, at the stage of managing and maintaining the system, the role of manholes is to provide access to collectors.

Accordingly, the manholes are installed:

a) at the beginning and the collector section junctions;
b) on the changes of pipe diameter of collector;
c) when changing the longitudinal gradient of collector;
d) collector places of turn;
e) at rectilinear sections, at a distance of maximum length of 60 m;

Manholes (inspection chambers) must be designed to withstand the various loads to which they may be exposed (own weight, direct loads, soil pressure, water pressure, buoyancy of water) during construction and exploitation, without loss of their functions and environmental damage, and must be protected from possible movements and when empty. Selected types of manholes should satisfy other prescribed conditions regarding the permitted deformations. Basis for structural calculation of chambers are provided in the technical regulations ATV-A 127 Guidelines for the static calculation of culverts and devices.

During the installation of manholes, it is necessary to carry out testing of compaction of the trench bottom, where the soil on which chambers are mounted must have Evd≥45 MN/m2. Mounting / installation of RO takes place on prepared ballast and concrete base, first preparing connecting pipelines, and then by controlling the vertical. Backfill is done with bund and tampon material in layers of 30-50 cm with proper compaction. In the case of the presence of water in the trench, backfill of RO is necessary to be made with concrete or fraction of appropriate granulation until the chamber is completely anchored, to avoid flotation.

Ending of an inspection window can be done in two ways. One way that is prevalent in our practice is to end inspection chambers with a conical ending (Figure 4). In the application of this solution, the upper part of the inspection chamber is narrowed to the diameter of the cover frame, and cover frame is fitted into the conical ending.

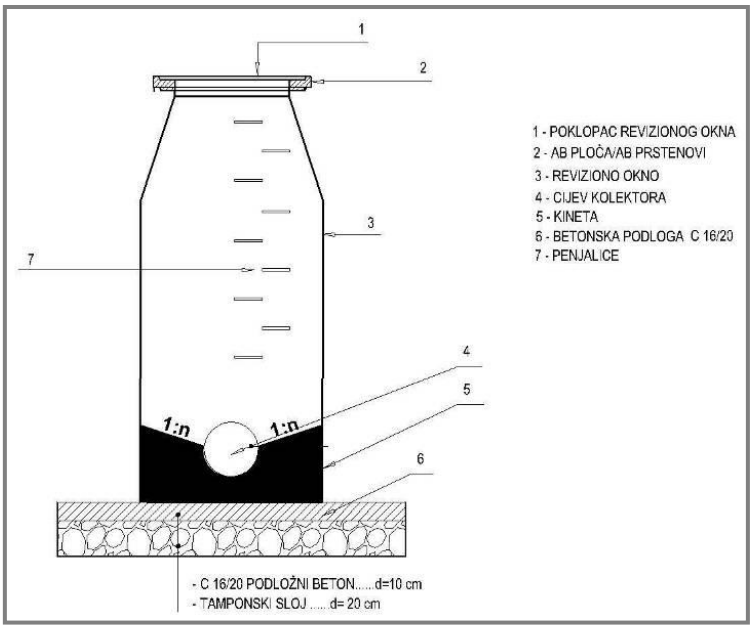

Figure 4: Detail of manhole with conical ending

1. *Manhole cover*
2. *RC slab-RC rings*
3. *Manhole*
4. *Collector pipe*
5. *Half-round gutter*
6. *Concrete base 16/20*
7. *Steps*

(Podložni beton- concrete base, tamponski sloj – ballast layer)

Another case of ending of an inspection chamber is installing RC slabs / rings, where the top RC ring leaves an opening for the installation of cover frame (Figure 5).

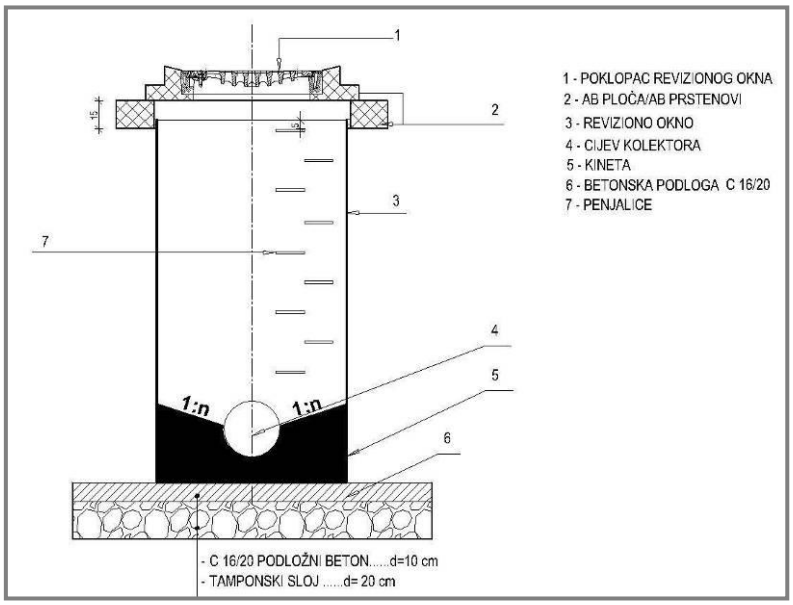

Figure 5: Detail of manhole with AB plates/rings

When choosing this solution (Figure 5), it is necessary to predict the precast RC slabs / rings, for easier installation and better performance. In order to achieve a better connection of

slabs/rings and cover frame, it is necessary to concrete the cover frame into RC ring in the phase of production of RC ring at the factory.

After the assembly of RC slabs/rings at the site, installation of covers is done. Inside the manhole, steps are installed for access to the inside of the shaft during maintenance. In the bottom of the inspection chamber, a half-round gutter is formed, which is made from the same material as the inspection chamber.

Half-round gutter is made to guide the flow of waste water and the height of the gutter amounts to 2/3 of the collector pipe, with the gutter walls toward the manhole walls made in the gradient 1: 3 to 1: 5, up to the full height of the profile.

In places where it is necessary to develop delevelling of input-output pipes from the inspection chamber, it is necessary to predict the cascade manholes. The need for installing cascade manholes is often the case at the discharge of water from the collector to the recipient.

Collectors / pipelines

The collectors have a function to transport collected amounts of water from the carriageway to the place of discharge. Collectors must have sufficient capacity to govern the relevant flow and additional conditions that are set refer to the speed of flow (V_{min} i V_{max}) and the fulness of the flow profile.

For the purpose of sizing the collector / pipe, the water flow rate can be determined by Chazi-Manning's formula:

$$Q = \frac{0,312}{n} \times D^{8/3} \times \sqrt{S} \qquad (19.1.12)$$

Where:
Q - authoritative flow (m^3/s)
n - Manning's roughness coefficient ($s/ m^{1/3}$);
D - internal diameter of the collector (m) and
S - longitudinal gradient of the collector (m / m).

This formula can be applied on the assumption that the flow in the collector is steady and uniform, and is valid for collector of circular cross-section, which is filled to the top (in full flow profile).
Manning's roughness coefficient is adopted depending on the selected material of collectors. In practical calculations, it is calculated with the Manning coefficient in the range of 0.011-0.013 ($s/ m^{1/3}$), which corresponds to an absolute roughness of the walls of the pipe-channels in the band from 0.55 to 1.5 mm. The value of the coefficient of 0,013 $s/ m^{1/3}$ (or roughness of 1.5 mm) is commonly used in the calculations. Minimum absolute roughness

that can be used in the calculations is 0.4 mm and is only used for new collector pipes of smaller diameter which are manufactured from thermoplastic materials.

Formula (19.1.13) is for collectors filled to the top (in full flow profile), however, taking into account the fact that most commonly collectors are not filled to the top, it is necessary to calculate the velocity and rate of flow in partially filled profiles, depending on the degree of filling . From the diagram below Q flow can be read and v speed for a circular profile pipes at partial filling of pipes h.

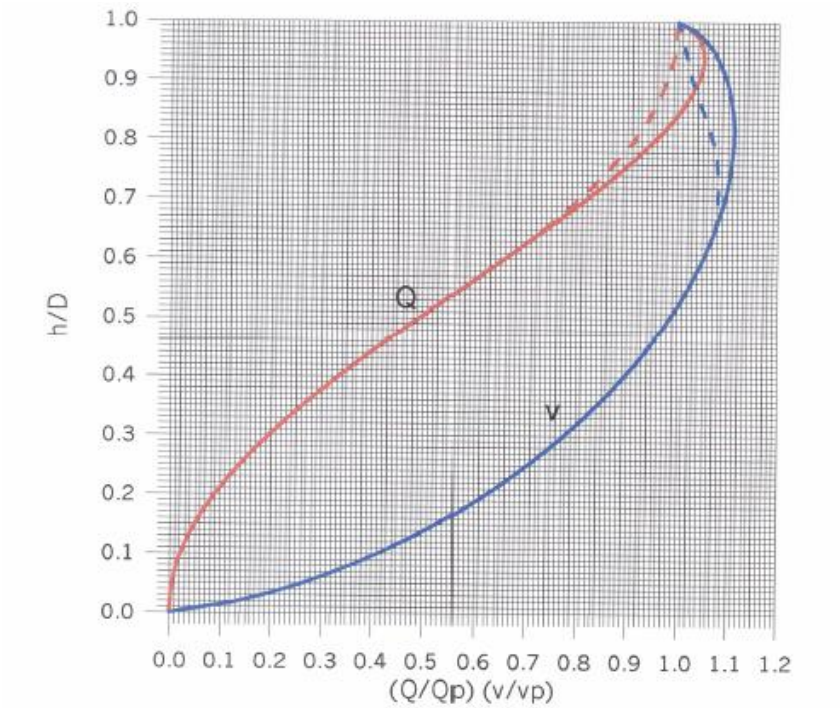

Figure 6: Dependence of Q/Qp and v/vp from h/D for circular profile pipes

To ensure proper connection of the gully to the collector, it is necessary to respect the conditions relating to the filling of collectors, noting that the for the pipes diameter DN / ID 300 mm the connection of the gully to collector pipe is not done directly.

$$\begin{aligned} &DN/ID = 300\ \text{mm} && hp = 0{,}60xDN/ID \\ &DN/ID = 400\ \text{mm} && hp = 0{,}70xDN/ID \\ &DN/ID = 500 - 900\ \text{mm} && hp = 0{,}75xDN/ID \\ &DN/ID > 900\ \text{mm} && hp = 0{,}80xDN/ID \end{aligned} \qquad (191.13)$$

where:
DN / ID - internal diameter of the pipe;
hp - fill level;

The above limits to filling of collector pipes are valid in the case of direct connection of the gully to the collector. Filling height can be greater when the connection of the gully to the collector is made through an inspection chamber, but in this case it is important to take into account the influence of the air flow on the regime of pipes.

The "2005 Guidelines" 8, presented the dimensioning of the pipeline using the equations by Colebrook. As an example, below is shown a nomogram of hydraulic parameters according to the formula Colebrook - White for the complete fulfillment of the sewage pipes of circular cross section, and whose roughness is 1.5 mm.

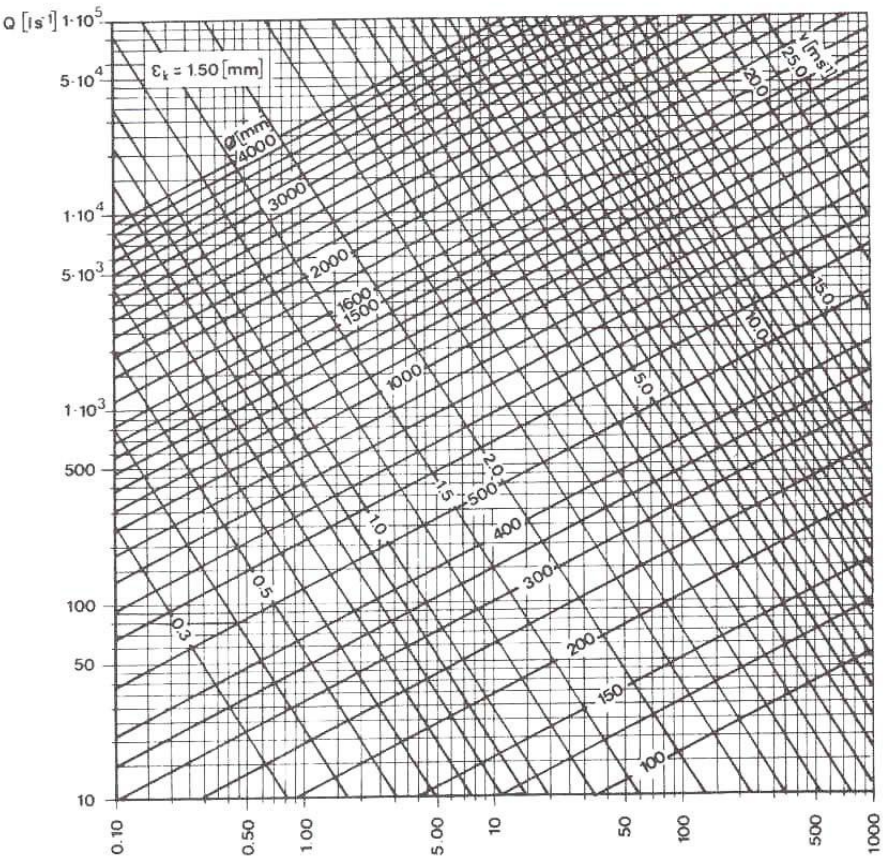

Figure 7: The nomogram of hydraulic parameters of completely filled sewage pipes of round shape profile according to Colebrook - White formula, for the roughness of 1.5 mm

When dimensioning the collector, dimensions shall be adopted (diameter) and collector gradient as to satisfy the design requirements for the relevant flow rates. To perform the collector, the best is when the bottom gradient corresponds to the route gradient. In this case, the burial depth is always the same and can match the minimum depth of burial, reducing the trench digging, and therefore the price of construction. This can be achieved if the route gradient is higher than the minimum allowable channels gradient, and less than the maximum allowable channel gradient. In the case where the route gradient is less than the minimum allowable channel gradient, the channel is set to the minimum gradient and in the downstream direction is gradually increasing digging, which has a direct effect on the number of places where it is necessary to provide outlets.

In cases where the route gradient is greater than the maximum channel gradient, the channel is set to the maximum allowable gradient, and the excess of the fall is regulated through cascades / cascade manholes.

Dimensions and other characteristics of the factory-made pipes are defined by a number of standards (ISO, EN, DIN, BAS, etc.) and recommendations. Also, every pipe manufacturer has brochures of product range, where one can find the necessary information about the types of manufactured pipes. Before installing the pipe, it is necessary to carry out testing of compaction of the trench bottom, where the soil on which pipes are installed must have Evd≥45 MN / m2.

Minimum dimensions of collectors

Minimum dimensions are prescribed for the purposes of inspection, cleaning and maintenance of the collector. It is recommended that the minimum internal diameter (circular profile) of the main collector pipe is DN / ID 300 mm, while for the cross-linking pipes (joining of gullies and collectors) minimum internal diameter DN / ID 200 mm is recommended.

Maximum and minimum collector gradients (pipeline)

The minimum and maximum allowable gradient of the collector bottom is prescribed so that flow velocities are in the range between the minimum and maximum allowed. Minimum gradients are prescribed in order to ensure the required minimum flow transport capacity for the purpose of self-flushing and to prevent deposition of materials in collectors. The maximum flow rate (or the maximum collector gradient) is prescribed in order to prevent erosion and wear of the inner wall of the material due to excessive flow rate.

For partially filled collector profile, the minimum flow rate must not be less than 0.4 m/s at a height of filling of 2 to 3 cm, while for the full pipe profile, the minimum flow rate is 0.8 m/s. Top speed is limited to 3 m/s in the full profile, if the pipe is almost always full to the brim or filling depth is always big. It is believed that if the water is constantly flowing through the collector at this rate, damaging wear will not occur. If the high speed is only intermittently realized (usually the case is that the collector is filled to the top only occasionally), top speed can be up to 5, not more than 6 /s.

Conditions of collectors trench excavation

The minimum width of the trench depending on nominal diameter of the pipe and the depth of the trench are prescribed in BAS EN 1610: 2002. The slope gradient of the trench depends on the depth of the trench, while the trenches deeper than 2.00 m require bracing, and in the design documents it is necessary to attach detail for bracing of the trench with all the characteristics necessary to perform.

The minimum depth of the collector trench is 80 cm from the pipe crown, in order to provide adequate protection of pipes, and prevent possible freezing of water in the collector. The maximum depth of the trench is limited because of the conditions of excavation and it depends on the characteristics of the soil, groundwater level and construction technology. Usually it is limited to about 7 m (4-5 m in case of a high level of ground water). If for some reason it is necessary that the depth of the trench is higher, then the collector sections are performed with any of the method of tunnel construction.

Installing collectors

Installation of the pipe in the central reserve / or shoulder zone is done on the prepared sand bed (*posteljica od pijeska)* of the trench of thickness minimum 10 cm.

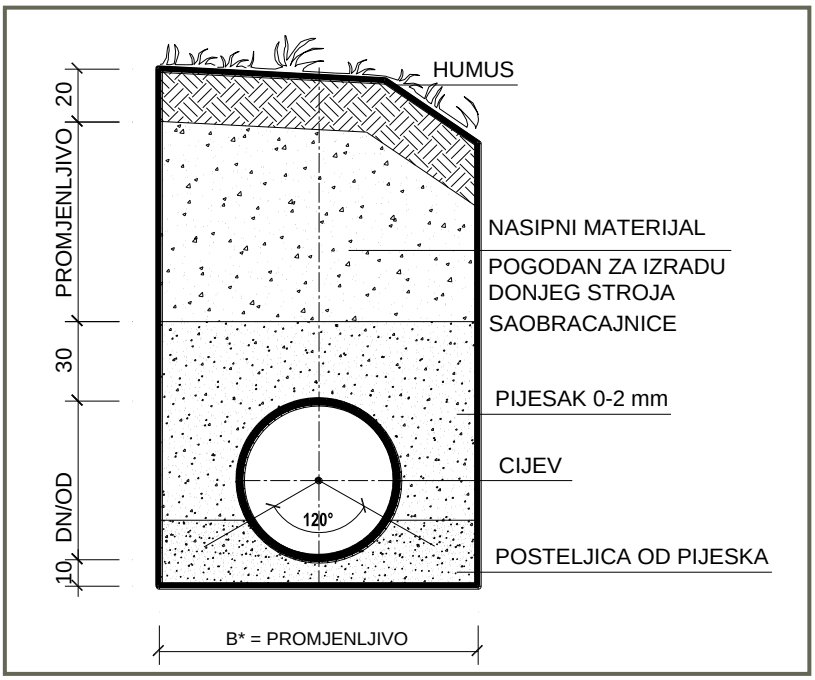

Figure 8: Detail of the trench in central reserve/shoulder zone

After mounting the collector pipes in the central reserve/ shoulder zone, backfilling of pipes is done with a layer of sand (grain size 0-2 mm), a thickness of 30 cm above the pipe crown using a hand tamper for tamping sand around the pipe, while the rest of the trench is backfilled with embankment material suitable for making lower road level *(nasipni materijal pogodan za izradu donjeg stroja saobracajnice))* with compacting to the required compaction.

Installing collector pipes *(cijevi)* which pass through the road structure is carried out in a way to make a concrete base and pipe RC coating. The thickness of the concrete base is 10 cm and it should be done with concrete strength class C25/30.

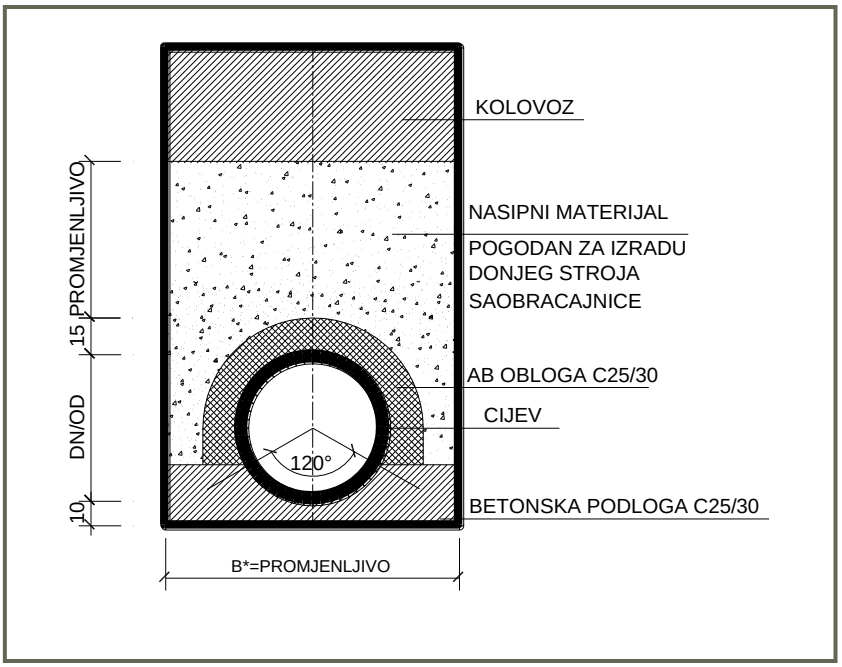

Figure 9: Detail of a trench in the carriageway

Reinforcing of the concrete coating is made so that the during the preparation of concrete base, anchors are made on which reinforcing mesh of RC pipe coating are continued. After the installation of the pipe onto a concrete base and installation of wire mesh for concrete coating, concreting of RC pipe coating is done. Thickness of RC coating is about 15 cm and the same must be made in concrete of strength class C25/ 0, reinforcement mesh Q188 and reinforcement rods/anchors Φ 12 mm. Before backfilling the rest of the trench, concrete, from which AB coating is derived should be hardened. Backfilling of the rest of the collector trench is made with bund material of granulation 0-63 mm in layers of 30 cm, with compaction to the required density. Where the entire collector trench is located in the embankment, during the excavation of trench, material is disposed along the edge of the trench and later used for backfilling the trench to the rest of the projected ground level. The excess material is used for the construction of embankments of the road structure. If the angle of the bottom of the collector trench is below the level of the bottom of the embankment, or if part of the trench excavation is done in clay material, then selection of excavated material is made. The selection of the excavated material is carried out so that the clay material is disposed, and the embankment material discarded on the side and used to backfill the rest of the trench.In the event that during the excavation of the trench, it is determined on the site that the embankment material, in which a trench excavation is made is not of adequate quality, and that cannot be used for filling in the rest of the trench (excavation during bad weather conditions, embankment of excessive granulation, etc.), it is necessary to remove the material, and then supply, transport and install new filling material of appropriate quality. All possible additional works and activities that occur during backfilling of the trench with embankment material of sufficient quality must be included in the bid amount of basic works. If the collector pipes are installed in an area with high level groundwater, the trench is placed in geotextile in which sand bed is performed, pipe is mounted and backfilling with sand is done around and above the pipe, and then geotextile is closed and backfilling of the rest the of trench is done to the angles of the field.

Performance of all works for the construction of collectors needs to be carried out in accordance with the requirements of Standard BAS EN 1610: 2002. All materials used for

the construction of the collector in contact with the liquids that flow in must be resistant to mineral oils, fuels (ie. Diesel oil), petrol, oil, detergents and their products in decomposition, or suitably protected.

Testing of waterproofing of the internal drainage

Since the waterproofing of the internal drainage is one of the basic conditions to be met by the system, after mounting the pipes, waterproofing is tested. Testing of waterproofing of the internal drainage system must be carried out fully in accordance with the requirements of standard BAS EN 1610: 2002. It is important to note that the trial waterproofing of the system is carried out directly after installation of pipes, and before backfilling of the pipe, because all the connections have to be visible, to allow their inspection.

CCTV inspection of the internal drainage

CCTV inspection (testing and evaluation of drainage system), or recording of collector via robot camera must be performed after laying and burying the collectors pipes, but prior to application of the final layer of asphalt on the section of highway. During the control/recording, all elements of the system must be cleaned, and if recording shows that the collector has material, the recording should be repeated after the collector is cleaned so that any possible damage, deformation and malfunctioning on a pipeline could be seen by recording and filed in the report.

CCTV inspections cannot be conducted at a speed greater than 15 cm/s. Minimum image resolution of CCTV inspection must be 768x576 pixels. Robot camera used to perform CCTV inspections must own pan & tilt option and an option for measuring the actual channel gradient. The actual channel gradient for each section of the collector must be an integral part of the report. CCTV inspection report must be analyzed and reviewed along with a supervising engineer and if there are irregularities that need to be repaired, or if the report recorded codes according to BAS EN 13508-2 + A1: 2012, which describes the defect under the condition of waterproofing, structural stability or security functionality that require to be repaired. The contractor is required to remediate any irregularity in order to achieve quality of the regularity of built pipeline safety under all three conditions. On completion of the repair, it is necessary to prove the regularity of the repaired pipeline trough CCTV reinspection and report.

The unit price of an item includes complete required work, equipment and resources to perform the work described and the final report in hard and soft copy, issued and certified by a specialized company/examiner who conducted the CCTV inspection in compliance with standard BAS EN 13508-2 + A1: 2012. The calculation is done by m ' of recorded collector.

CCTV inspection must be carried out in accordance with all the requirements and instructions specified in the BAS EN 13508-1: 2014 and BAS EN 13508-2 + A1: 2012.

19.1.3.3. Technical requirements for the design and construction of the internal drainage system elements

Overview of the basic technical characteristics for: internal drainage system elements (gutters, concrete segmental channels, gullies, manhole / chambers and collectors), and overview of the relevant standards is shown in the following table and these should be respected in the design and construction of the system, all in accordance with the applicable regulations and standards.

ELEMENTS OF INTERNAL DRAINAGE SYSTEM		
DESCRIPTION	**CHARACTERISTICS**	**Relevant standards/ norms**
GUTTERS		
Location	- At the carriageway edge of overtaking or emergency lanes of the motorway;	
Dimensions and basic conditions	- Dimensions of gutters are to be determined in accordance with hydraulic calculation; - - The cross gradient of gutters 10-20%; - - Longitudinal gradient of gutters identical to longitudinal gradient of carriageway, but shall not be less than 0.5%;	
Materials	- Concrete C35/45, XC4/XD3/XF4[11];	BAS EN 1433:2005 BAS EN 1433/A1:2010
Type of performance	- Monolithic trimmer;	
Maintenance	- Maintenance carried out in parallel with the maintenance of internal drainage system;	
SEGMENTAL CONCRETE CHANNELS		
Location	- In the central reserve	
Dimensions and basic conditions	- **-** Minimum width of the segmental concrete channels 80cm, depth 20 cm;	
Materials	- Concrete C35/45, XC4/XD3/XF4[11];	BAS EN 1433:2005 BAS EN 1433/A1:2010
Type of performance	- - Installation or monolithic trimmer.	
Maintenance	- Maintenance carried out in parallel with the maintenance of internal drainage system;	
GULLIES		
Location	- In gutters and/or segmental concrete channels;	
Dimensions and basic conditions	- The gully of internal diameter DN/ D 400 mm, the minimum depth of sedimentation tank 100 cm; - The gully of internal diameter DN / ID 500 mm, the minimum depth of sedimentation tank 50 cm; - It is recommended that the internal diameter of the gully pot is DN/ID 500 mm for easier maintenance of gullies and gully connection to the collector; - The minimum internal diameter of connecting pipes is DN/ D 200 mm, crown stiffness SN ≥ 8KN/m2.	

[11]Construction products installed in concrete constructions must be designed and performed in accordance with valid legislation. Currently this area is regulated by: Rules on technical regulations for construction products installed in the concrete constructions (Official Gazette of FBiH no. 86/08)

ELEMENTS OF INTERNAL DRAINAGE SYSTEM		
DESCRIPTION	**CHARACTERISTICS**	**Relevant standards/ norms**
	- At least one gully on 400 m2; The maximum distance of the gullies is: - 25 m - for the longitudinal carriageway slope > 1%; - 10.0 m - for cross-slope of 2.5% and 0.5% for longitudinal; - 4.0 m in places of carriageway slope changes (warping).	
Materials	- The gully pot: thermoplastic (polypropylene - PP) and duroplastic (polyester reinforced with glass fibers- GRP);	BAS EN 476:2012 BAS EN 13598-2:2010 BAS EN 15383+A1:2014
	- Ending of the gully pot: Reinforced-concrete rings;	DIN 4052-10a, DIN 4052-10b i DIN 4052-11.
	- Gully grating: nodular cast iron (ductile iron), DN class load of 400 kN, with transport lock and additional anti-theft locking;	BAS EN 124: 2002/ DIN 1229,
	Connecting material (elbows, couplings, saddles, terminal adapters, tubes) of polypropylene - PP, polyvinyl chloride - PVC, reinforced polyester - GRP; All gully connecting elements (gaskets, fittings, saddles, elbows, pipe connection etc.) must be from the same manufacturer, and must provide waterproofing at the connection. All materials used for the production of gullies, which are in contact with the liquids that flow in, must be resistant to mineral oils, fuels (ie. Diesel oil),petrol, oil, detergents and products of their decomposition, or with the appropriate protection.	BAS EN 1852-1:2010 BAS EN 1401-1:2010 BAS EN 14364:2014 BAS EN 12666-1+A1:2012 BAS EN 13476-1:2009 BAS EN 14457:2008; BAS EN ISO 9969:2010; DIN 4262-1
Type of performance	- - All parts of the gully (gully pot, RC rings and grating) are with integrated mounting.	
Maintenance	- - All parts of the gully must be available at all times and regularly maintained; - - Maintenance of the internal drainage system must be carried out at least every six months and in accordance with instructions for cleaning and maintenance of the system; - - Cleaning and flushing of the system is done with a vacuum pump of pressure 1-2 bar;	Instruction on maintaining the system, prepared by the manufacturer and delivered to the end user.

INSPECTION SHAFTS/MANHOLES		
Location	-At the start and at the connection of collector sections; - At the places of change of collectors pipe diameter; - When changing the longitudinal gradient; - In places of the turn of the collector; - On straight sections of the distances ≤60mA	
Dimensions	- For pipes of diameter up to DN/ID 600 mm: minimum internal diameter of IC DN/ID 1000*; - For pipes of diameter ≥ 600 mm: minimum internal diameter of IC DN/ID 1200 mm for circular cross section of IC.	BAS EN 752: 2010
Materials	- Inspection chambers (manholes) should be made of listed material as follows:	
	a) The thermoplastic (polypropylene - PP) and b) Duroplastic materials (reinforced polyester - GRP).	BAS EN 476:2012 BAS EN 13598-2:2010 BAS EN 15383+A1:2014
	a) Reinforced concrete for manholes that are in the carriageway (the traffic area of the Center for maintenance and control, plateaus and traffic area of toll points, rest areas, loops, etc.) of strength class C30 / 37;	BAS EN 1917:2007 BAS EN 1917/Cor2:2010
	- Ending of an inspection shaft: reinforced concrete rings or RC conical end;	DIN 4052-10a, DIN 4052-10b i DIN 4052-11.
	- Cover of the IC in the road: ductile iron, DN-class capacity of 400 kN with transportation lock and additional anti-theft locking; - - Cover of IcC in green areas outside the influence of traffic volume: RC cover with handle for opening.	BAS EN 124:2002/ DIN 1229,
	- - Inox steps for access to IC.	BAS EN 14396:2008
	- For IC of thermoplastic (polypropylene - PP) and duroplastic materials (reinforced polyester - GRP) half-round gutter is performed from the same material as the IC; - - For the IC of reinforced concrete, half-round gutter is performed of concrete C30 / 37.	
	- Connecting material (elbows, couplings, saddles, terminal adapters, tubes) of polypropylene - PP, polyvinyl chloride - PVC, reinforced polyester - GRP; - All manhole connecting elements (gaskets, fittings, saddles, elbows, etc.) must be from the same manufacturer, and must provide waterproofing at the connection. - All materials used for the production of gullies, which are in contact with the liquids that flow in, must be resistant to mineral oils, fuels (ie. Diesel oil),petrol,	BAS EN 1852-1:2010 BAS EN 1401-1:2010 BAS EN 14364:2014 (EN 4364:2006+A1:2008) BAS EN 12666-1+A1:2012 (BAS EN ISO

ELEMENTS OF INTERNAL DRAINAGE SYSTEM		
DESCRIPTION	**CHARACTERISTICS**	**Relevant standards/ norms**
	oil, detergents and products of their decomposition, or with the appropriate protection	9969:2010) BAS EN 13476-1:2009 BAS EN 14457:2008; BAS EN ISO 9969:2010; DIN 4262-1
Type of performance	- All parts of the manhole are with integrated mounting.	
Maintenance	- All parts of an inspection chamber must be available at all times and regularly maintained; - Since the manholes are located on the collector of internal drainage system, maintenance and cleaning is carried out together with the maintenance and cleaning of collectors.	Instruction on maintaining the system, prepared by the manufacturer and delivered to the end user.
COLLECTORS		
Location	- Central reserve; - Hard shoulder; - Motorway structure (cross connection of collectors).	
Dimensions	- Pipe diameter is determined by hydraulic calculation, while the recommended minimum diameters of pipes are: - The minimum internal diameter of DN / ID 300 mm; - The minimum internal diameter of DN / ID 200 mm for connecting lines;	
Materials	Collectors must be made of following materials:	
	a) Thermoplastic materials (SN ≥ 8 KN/m^2) ✓ corrugated polypropylene- PP;	BAS EN 1852-1:2010
	✓ PVC-polyvinylchloride (full wall);	BAS EN 1401-1:2009
	b) duroplastic materials ✓ polyester pipes reinforced with glass fibers - GRP, SN ≥ 5000). a) All connecting elements of collectors (gaskets, fittings, etc.) must be from the same manufacturer and quality as collector pipes, and must provide waterproofing at the connection	BAS EN 14364:2014

ELEMENTS OF INTERNAL DRAINAGE SYSTEM		
DESCRIPTION	**CHARACTERISTICS**	**Relevant standards/ norms**
Installation of pipes	- Installation of the pipes should be carried out in the previous impaled trench and prepared sand bed ; - Minimum trench width depending on the pipe diameter and the depth of burial; - Installation of pipes carried out according to the manufacturer's instructions; - *For pipes that are implanted in the central reserve and shoulder zone:* - Assembly done on a sand layer of minimum thickness of 10 cm; - Above and around the pipe backfilling is made with sand thickness of 30 cm above the pipe and granulation 0-2 mm; - Backfill of he rest of the trench is done with selected material from excavation, granulation 0-63 mm in layers of 30 cm, with compacting; - For pipes that are implanted in the road structure: - Assembly is done on the concrete base thickness of 10 cm; - After mounting the pipe RC coating is performed around the pipe thickness up to 15 cm; - Characteristics of materials for the concrete base and RC coating around the pipe: concrete C25/30 and reinforcement Q188; - Backfilling the rest of the trench with embankment material from the excavation can be carried out only after the concrete reaches a strength of 60% of the required strength of concrete; - The final layer must have a degree of compaction that is required for embankment bed (Evd≥45 MN / m 2).	BAS EN 1610:2002
Quality of performed works	- Before backfilling the pipe it is necessary to perform testing of waterproofing system. Testing can be performed with air or water; - Testing of system waterproofing shall be carried out after all connections, so that the entire system is tested for waterproofing (gullies, connections, the collector and IC);	BAS EN 1610:2002
	- CCTV inspection of completed works; - Before the CCTV inspection it is necessary to make cleaning and flushing of the pipeline at a pressure of min. 150 bar (nozzle pressure); - CCTV inspection is performed for the entire system of internal drainage (gullies, connections, secondary collectors, main collector and I); - CCTV inspection on the motorway should be made after completion of the works carried out in the vicinity of the collector (installation of guardrails, lighting poles base, portals, etc.), but before making	BAS EN 13508-1:2014 BAS EN 13508-2+A1:2012

ELEMENTS OF INTERNAL DRAINAGE SYSTEM		
DESCRIPTION	**CHARACTERISTICS**	**Relevant standards/ norms**
	the final coating of asphalt;	
Maintenance	- All components that are maintained must be available at all times; - The quality of pipe material should provide stability at the flushing under pressure of min. 150 bar (nozzle pressure); - Maintenance is necessary to be performed in accordance with the instructions for cleaning and maintenance of rainwater collectors; - Maintenance of the internal drainage system must be carried out at least every six months and all in accordance with the instructions for cleaning and maintenance of the system.	Instruction on maintaining the system, prepared by the manufacturer and delivered to the end user.
* These minimum diameters of an inspection chamber do not apply to monitoring chambers. Dimensions of monitoring chambers are determined by the water management conditions and applicable legal legislation governing the area of water protection.		

Table 2: Technical requirements for the design and construction of elements of the internal drainage system and an overview of the applicable norms

19.1.4. Shallow and deep drains

Shallow and/or deep drains used for the collection and drainage of leachate waters or drainage of motorway. Shallow or sub-gutter drains are used to draining motorway structure and the same are located below the gutters, while the deep drains collect leachate waters from the scarps and surrounding terrain along the motorway route. Due to the location of shallow and deep drains, in most cases shallow drains are discharged into the internal drainage system, while the deep drains are discharged into canals, culverts or water flows.

Discharge of water with drains prevents inflow of the water into the structure of the carriageway and provides drainage lowering of the groundwater level. This accelerates consolidation, stabilization and improves capacity of very compressible, little permeable and weak cohesive soil. Draining of water from the road structure is ensured with drains and supporting facilities that are connected to the drains.

For draining road structures the following are used:
- Shallow, deep, longitudinal and transverse drains;
- Vertical drains and drainage wells.

After the excavation of the trench, shallow and deep longitudinal and transverse drains are to be installed on a layer of the substrate concrete. Dimensioning of drainage collectors should be done in accordance with a hydraulic calculation, with the inner diameter of the pipe not less than DN / ID 200 mm. The reason for the adoption of minimum internal diameter of DN / ID200 mm is easier and simpler maintenance and inspection of drainage collector during operation of the motorway. Hydraulic calculation of drainage collector shall be made on the basis of hydrological data, and based on the characteristics of the soil (permeability, geomechanical properties etc.) from which water is collected.

In the development phase of preliminary design for drainage systems, it is necessary to supply all the appropriate details in order to smoothly carry out works (situational display with the schedule of manholes and outlets, longitudinal profile, transverse profile, detail of the trench, detail of an inspection chamber, detail of outlets etc.). Also during the development of preliminary design, it is important to predict manholes at maximum distance of 60 m, and properly solve the water discharge from the drainage collector into recipients.

19.1.4.1. Shallow (sub-gutter) drains

Sub-gutter drains are suitable for collection of water from the motorway structure in the case of the transverse slope of the carriageway to the central reserve. Consequently, shallow drains are placed under the gutter, which is located along the central (central reserve) zone of the motorway. In the case of the transverse slope of the carriageway toward shoulder zone, subsoil water flows freely through the embankment, and sub-gutter drainage is not required.

Preliminary design of sub-gutter drains has to be designed so that the discharge of water from the drainage pipes is done independently or through a system of external or internal drainage. To ensure adequate drainage of the road bed, final angle of the road bed must be in level of perforation of drainage pipes.

19.1.4.2. Deep drains

Deep drains are used to prevent leakage of water into the motorway structure in areas where the motorway route passes through cuts and deep cuts, drainage, and the lowering of groundwater level.

If in a particular case, the discharge of drainage water is carried in the system of internal or external drainage, it is important to take into account actual depth of drainage. The actual drainage depth is determined during earthworks, depending on the depth of the excavation in poor material (if it has been higher than the projected).

Generally, for each replacement of subsoil and/or other changes within the motorway structure, it is necessary to analyze the impact of changes to the drainage system and thus determine whether it is necessary to make corrections of the preliminary design.

19.1.4.3. Materials for shallow and deep drains

The "2005 Guidelines" 9 prescribed materials that are used for drainage of the motorway structure, as well as the quality of materials that should be met prior to and during installation. The remainder of this paper will present the basic characteristics of the pipe material to be used for making drainage collectors, while the characteristics of the material for the substrate layer and the filter material should be used in accordance with the conditions and requirements set out in the "2005 Guidelines".
To create a drainage collector it is necessary to use pipes of thermoplastic materials (polypropylene - PP, polyethylene - PE), and not from the pipe made of cement concrete which require significantly longer installation time compared to pipes of thermoplastic material, and the number of joints is significantly higher .

Cross-section of the drainage pipe should be circular. The pipes must be perforated. Drainage pipe of thermoplastic materials must meet the requirements for:
- Dimensions: pipe diameter and wall thickness;
- Mass;
- Schedule and surface of drain water outlets (throughput capacity of drainage);
- Stiffness.

The quality of pipes and fittings made of thermoplastic material for the drainage must meet the requirements of DIN 4262-1. For all drainage pipes and fittings of thermoplastic materials, the following information has to be included in the technical documentation:
- Pipe diameter;
- Type of perforation;
- Category of pipes depending on the required peak stiffness.

19.1.5. Systems for the treatment of rainwater from the carriageway/water protection systems

Contaminated waters entering the roadway and surrounding terrain have big weather fluctuations in registered amounts, and in the degree of pollution.

Previous studies indicate the presence of the following pollutants in rainwater from the road:
- Organic pollutants, expressed as a five-day biochemical oxygen demand (BPK 5), are present in low concentrations with runoff from roads, but their concentration can be increased if the runoff is from the green areas;
- Suspended solids are considered to be the most severe pollution in rainwater, as they may be present in significant concentrations;
- Heavy metals, such as copper, lead, cadmium, nickel, chromium and zinc are present in the rainwater from roads in a wide range of concentrations, concentration of them shows a good correlation with the concentration of suspended particles, and primarily depends on the intensity of the traffic;
- Oils and greases are present in rainwater from the road and their presence is an indication of accidental pollution (oil and fuel leaks from motor vehicles, accidental spills and the like.);

Tests have also revealed that the concentration of contamination in the rainwater on the road, in most cases, is the largest at the beginning of the rain (the first flush). As a part of the pollution generated as a result of deposition of particles from the air, the quality of rainwater can depend on the period of time between two episodes of rain, or the total time without precipitation during the period under consideration.
For discharge of rainwater from the motorway it is necessary to provide water requirements from the relevant water management authority (the authorized agency for waters). Depending on the requirements of legislation in the field of water, a solution for rainwater purification systems is designed.

The "2005 Guidelines" [12] list the basic requirements and conditions relating to the protection of water and soil. Protective measures that serve to limit and prevent the direct impact of traffic on the quality of water resources are based on hydrological grounds and assessment of the sensitivity of the area.
Through development and construction of roads in the FBiH in the past, there has been an increase in the number of sources of pollution from the road under the influence of various factors such as: the characteristics of the traffic, atmospheric residue, the local conditions of the basin (land use, motorway surface maintenance mode etc ..), and the accidental spills. Considering the above, the need has arisen for the introduction of a new, comprehensive approach, in order to increase the contribution in terms of long-term protection of water and environment[13].

The required quality of water discharged from the carriageway into the recipients depends on the local conditions. [14] If the anticipated discharge of rainwater from the motorway is into the public sewerage system, it is necessary to provide conditions for the discharge from the relevant public utility company that administers it.

19.1.5.1. Elements of water protection system

Overall, bearing in mind the need to adequately protect the area through which the road infrastructure passes, it is necessary to foresee an appropriate system of water protection with the ultimate aim of reducing pollution and safeguarding water and water-dependent ecosystems.

Elements of water protection are:
- Entrance or separation chamber;
- Tank for receiving accidental spill;
- Oil and grease separator and/ or lagoon, and
- The monitoring chamber

[12] Volume I- Designing, Part 1. Road design, Chapter 6: Road and environment
[13] Depending on hydro-geologic conditions of the field and sensitivity of the area , it is neccessary to calculate Qkrit and based on it adopt the optimal level of water and environment protection. In addition, it is neccessary to take into considertaion possibility of accidents and accordingly establish adequate water protection system.
[14] Regulation on discharge of waste water into natural recipients and public sewage system (Official Gazette of FBiH 04/12) currently prescribes conditions for releasing waste water into environment

Entrance or separation chamber

All the water from the internal drainage system is drained to the inspection or sepration chamber, and then distributed to the oil and grease separator and/or a reservoir for receiving the accidental spills. Sizing and selection of materials of inspection/separation chambers needs to done according to the instructions presented in the chapter: "**Inspection chambers / manholes**" of this document.

Reservoir for acceptance of accidental spills

Depending on the conditions and demands for the release of rainwater from the motorway, issued by the relevant water management authorities, as well as the possibility of accidental contamination, it is necessary to predict reservoir for receiving accidental spills. When sizing the tank, it is necessary to ensure available reservoir space with capacity of at least 20 m3 for emergency accidental loads. Reservoir for acceptance of accident spills has to be selected so that during the construction and exploitation it withstands all loads to which it may be subjected, without loss of its function and damage to the environment.

Also, the area around the reservoir must be protected against possible flooding (carrying by water) when empty. In the design phase of the reservoir for receiving accidental spills, it is necessary to do all the necessary calculations, and within the project documents provide details of performance.

Separators

Oil, gasoline, gas oil, lubricants, heating oil and other substances have a lower specific gravity than water. This feature is used by oil and grease separator that uses gravity of above liquids to separate it from the water. The purpose of oil and grease separator is to allocate all of the light fluid, i.e. oils and greases, and prevent their release into the environment. Valid regulations[14] prescribe conditions which must be satisfied before discharging wastewater into the environment.

Depending on the water management conditions, oil separators that are installed can be:
- Separators with non-integrated bypass
- Separators without bypass

Separators with non-integrated bypass

Separators with non-integrated bypass (Figure 10) are used for the treatment of rainwater on moderately sensitive areas (outside the high risk zone). Thus it is ensured that the first wave of contaminated water is introduced into a separator, and other precipitation amount from elution surface is lead through the bypass. With such devices work, optimization of the capacity of the unit is achieved and it significantly reduces the cost of total investment.

The following figure depicts a schematic overview of the separator with non-integrated bypass.

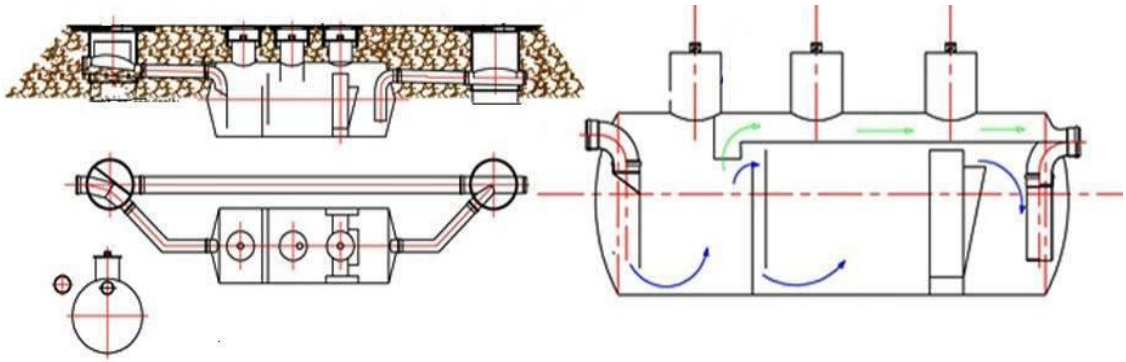

Figure 10: Schematic overview of the separator with non-integrated bypass

Separators without bypass

Separators without bypass (Figure 11) are used for treatment of rainwater in areas where discharged water must be purged completely. Installation locations of separators without a bypass are the following:
- Zones of sanitary protection;
- Protected areas;

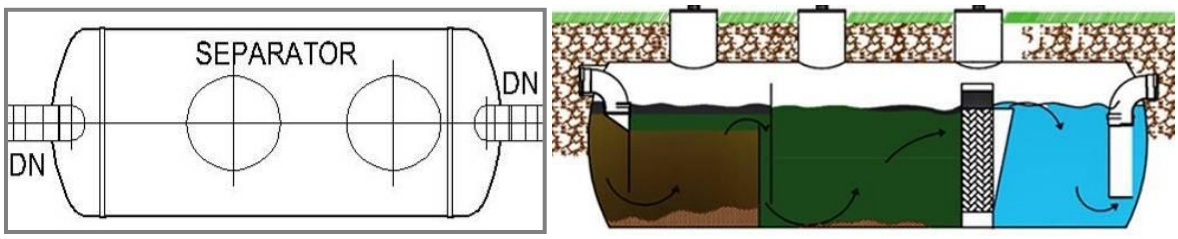

Figure 11: Schematic overview of the separator without bypass

Design and installation of separators

Determining the capacity of the separator is carried out in the design phase, based on the quantity of rainwater that enters the separator (during hydraulic calculation of collector) and the required degree of purification. From the static point of view, the separator must be dimensioned so that during installation and exploitation it withstands all loads to which it may be exposed without loss of its function and damage to the environment. The area around the separator must be protected against possible flooding (carrying by water) when empty.
Structural stability of the separator must be provided in accordance with applicable norms and standards, and in accordance with the instructions laid down in the European standard EN 858-1: 2005. Separator should have equipment to ensure adequate water purification and proper functioning of the separator.

The equipment of separators includes:
- Coalescence filter which performs the separation of light oil products (separation of water and oily liquid;
- A closing device for ensuring that the collected liquid does not pass to the separator outlet. Devices for automatic closing, working with the float must be set and marked by the density

of 0.85 g/cm3 and 0.90 g/cm3 or 0.95 g/cm3 in accordance with the expected density of light liquids;
- Alarm warning device in the case of the sinking of the float should be provided only in areas for which more stringent conditions are prescribed for the purification of rainwater;
- Pre-installation for connection of the sets intended for sampling;
- Openings (inspection) and covers of the separator with a mechanism for locking against unauthorized access;
- Sedimentation tank, separated from the oil separator;

Depending on the volume and load of separators, it is necessary to do static analysis for the lower and relieving (upper) RC slab of the separator. RC relieving (upper) slab is performed if the overlay of soil material is greater than 2 m. above the separator.
When sizing the RC slabs it is important to consider that the thickness of the lower RC slab is less than 20 cm, while the minimum thickness of the relieving reinforced concrete slab should not be less than 15 cm. To create a reinforced concrete slab, the use of concrete C25/30 and wire mesh Q335 (two zones of reinforcement) is recommended. In addition, it is necessary that installation of the separator of oils and greases is performed in accordance with the specific instructions provided by the manufacturer of the system in specific case.
When installing and positioning the separator it is necessary to take into account the following:

- Separator should be installed only in drainage systems where the light liquid needs to be separated from the water and kept in the separator;
- The separator is to be installed near the source of light liquids, in a well-ventilated area, and easily accessible for cleaning and maintenance;
- If there are electrical appliances for light liquids warning and other electrical equipment located in the separator, it must always be in function and suitable for work (the requirements of Directive 94/9/EC);
- All drainage to and from the separator systems must be in accordance with BAS EN 752: 2010. Pipes and connections to the separator system must be resistant to light liquids;
- Before backfilling the separator, it is necessary to check the water resistance of the built-in device;

In the case of installing the separator into the ground with underground water, attention should be paid to the appearance of the lifting force. Mounting on the field with high ground waters is achieved by anchoring the separator to RC slab. RC dimensions shall be determined according to buoyancy force. Number of places for anchoring, dimensions of anchors and strength of lashing straps are sized from the stability conditions.

Hydraulic calculation of separators

Usually the required capacity calculation of oil and grease separator with sedimentation trap is not done when it comes to prefabricated separators, since dimensioning of pipelines for drainage provides the required amount of pollution that enters the separator.

For surface wastewater, preliminary design of standard devices is adopted, such that the effluent from the device must meet the limits prescribed by applicable legal legislation for

wastewater discharge into recipient[14].Dimensioning of separator needs to be made according to the BAS EN 858-2: 2002.

Monitoring manhole

In accordance with the requirements of the applicable regulations, shortly before discharging water into the recipient (public sewage system, a natural watercourse, etc.) it is necessary to provide monitoring manhole. Dimensions of the monitoring manhole are determined by the applicable legal legislation, and in FBiH this is a Regulation on the disposal of waste waters[14]. Location of the monitoring manhole must be determined so as to allow access to the manhole, for reasons of sampling and maintenance. At the end of the outlet structures, a "**frog"** cover should be made.

19.1.5.2. Conceptual solutions of the water protection system

Conceptually, water protection system depends on the hydrogeological characteristics of the terrain and the level of sensitivity of the area through which motorway route passes, and conditions prescribed by the competent water management authority.
The concept of solution shown in Figure 12 is applied when the competent water management authority requires and stipulates stricter requirements for the treatment of rainwater, or when the motorway route passes through areas of high risk in which the application of the strictest criteria is required in terms of protection and conservation of water and the environment. In this case, the installation of separators without bypass is planned as well as the reservoir for receiving the accidental spills.

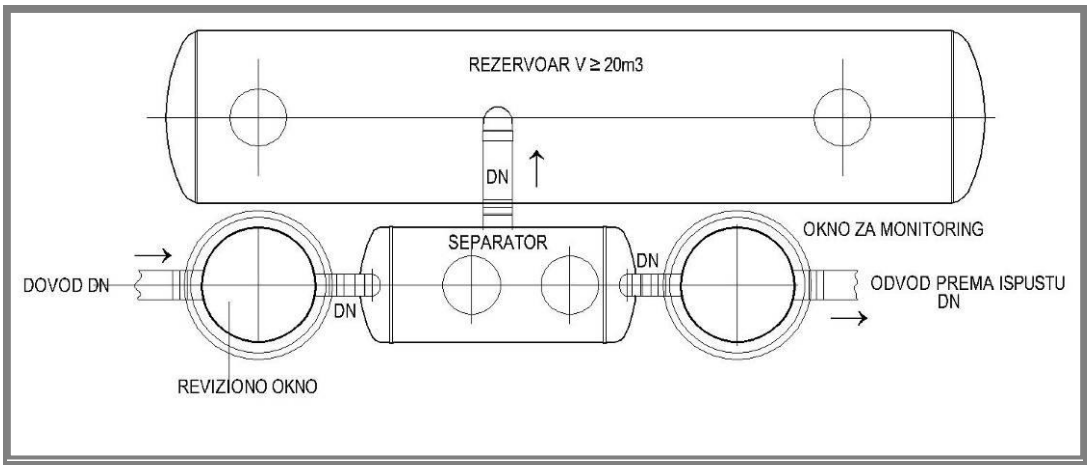

Figure 12: Schematic overview of the elements of water protection system in case of installation of the separator without bypass

The concept of solution which includes the performance of the separator with non-integrated bypass is applied in case of areas outside the high risk zone. It is necessary to take into account that a minimum level of purification of water should be 10%[13].

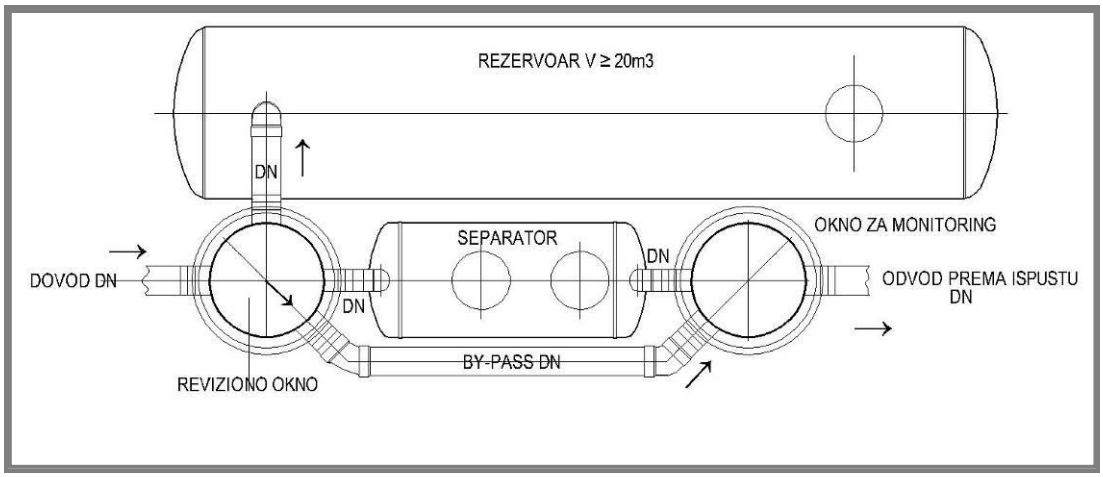

Figure 13: Schematic overview of the elements of water protection system in case of installation of the separator with non-integrated bypass

19.1.5.3. Technical requirements for the design and construction of elements of the water protection system

Overview of the basic technical characteristics for: elements of water protection (entrance / separation chamber, oil and grease separator, a reservoir for receiving accidental spills and monitoring chamber), and an overview of the relevant standards is shown in the following table and these must be respected in the design and construction of the system, all in accordance with the applicable regulations and standards.

ELEMENTS OF WATER PROTECTION SYSTEM		
DESCRIPTION	**CHARACTERISTICS**	**Relevant standards/norms**
ENTRANCE/SEPARATION MANHOLE		
A detailed description of the manholes is given in chapter "Inspection s chambers / manholes (IC)", while the main characteristics of inspection chambers are provided in section 19.1.3.3 (Table 2), and the same apply to entrance/separation manholes.		
OIL AND GREASE SEPARATOR		
Class	- I	
The maximum possible residual oil content	- 5.0 mg/l	BAS EN 858-1:2005
Preferred nominal size (l/s)*	- 1,5; 3; 6; 10; 15; 20; 30; 40; 50; 65; 80; 100; 125; 200; 300; 400; 500	
Recommended materials	- Duroplastic materials (reinforced polyester - GRP) which guarantee water tightness and resistance to aggressive effect of polluted water; - Thermoplastic materials (polypropylene - PP) which guarantee water tightness and resistance to aggressive effects of contaminated water. **Note:** The materials of which separator is made must be resistant to mineral oils, fuels (diesel oil), oil, petrol, detergents and products of their decomposition.	
Quality of works	- Before backfilling oil and grease separator, it is necessary to test water tightness;	BAS EN 1610:2002
Maintenance	- All components that are maintained must be available at all times; - Maintenance must be performed at least every 6 months; - Maintenance must be performed in accordance with manufacturer's instructions, and must include at least the following details: a) **Sludge storage tank:** ✓ Determination of volume of sludge; **b) Separator:** ✓ thickness measurement of light liquids; ✓ Checking the operation of the automatic closing; ✓ Checking the permeability of coalescing device, ✓ Checking the function of a warning device.	Instruction on maintaining the system, prepared by the manufacturer and delivered to the end user.

ELEMENTS OF WATER PROTECTION SYSTEM		
DESCRIPTION	**CHARACTERISTICS**	**Relevant standards/norms**
	c) The opening for sampling ✓ Cleaning of the drainage channel. At intervals up to 2 years, the separator must be emptied and subject to the general inspection, which includes the following: - Checking the tightness of the system; - State of construction; -state of the inner lining, if any; - Condition of embedded parts; - Condition of electrical equipment and installations; - Checking the setting of the automatic closing eg. of the floating body. -	
RESERVOIR FOR ACCEPTANCE OF ACCIDENTAL SPILLS		
Dimensions	- The total capacity of the reservoir to be determined on the basis of the calculation; - The minimum capacity of the available reservoir space for receiving accidental spills is 20 m^3.	
Materials	- Thermoplastic and duroplastic materials that guarantee water tightness and resistance to aggressive effects of contaminated water; - Materials used must be resistant to mineral oils, fuels, (i.e., diesel oil), gasoline, oil, detergents and their products of decomposition or adequately protected;	BAS EN 976-1 i BAS EN 976-2
Quality of works	- Before backfilling the reservoir for accidental spills, it is necessary to test water tightness;	BAS EN 1610:2002
Maintenance	- All parts of the system (pipes, manholes, separator, reservoir) must be regularly maintained and at any time available; - - Flushing and cleaning of the system is performed every 6 months;	Instruction on maintaining the system, prepared by the manufacturer and delivered to the end user.
MONITORING MANHOLES		
A detailed description of the manholes is given in chapter "Inspection chambers / manholes (IC)", while the main characteristics of inspection chambers are provided in section 19.1.3.3 (Table 2). In addition to the requirements given in the table, when designing monitoring manhole, it is important to comply with requirements prescribed by valid legislation[14].		

Table 3: Technical requirements for the design and construction of elements of the water protection system and overview of the applicable norms.

Note:

In accordance with the requirements of BAS EN 58-1, the maximum capacity of the separator is 500 l/s. For systems in which greater flow occurs, it is necessary to modify the concept of the system of water protection. One of the solutions for water protection system of flows bigger than 500 l/s is to divide water inflow from separation chamber so it distributes and enters two or more separators of the same or similar capacities. Draining of water from the separator is made into monitoring manhole and further from monitoring manhole to the recipient.

19.1.6. Extended detentions basins

Basins with extended detention are used to remove contaminants from storm water, as well as detention to reduce peak flows at the level before the construction of roads, as well as recipients.

To remove contaminants from storm water, basins can be used in the case when there is a great concentration of suspended solids, as in the case of the removal of heavy metals. Depositing and floating substances are removed from rainwater, and with them the nutrients, heavy metals and toxic substances, while the control of runoff protects downstream facilities against erosion and reduces the possibility of flooding. The effectiveness in removing contaminants in basins increases with increasing time of water detention.

In areas where it is difficult to discharge treated water (no suitable recipient in the vicinity) of the system of internal and / or external drainage, basins can be used as recipients.
It should be noted that the construction of the basin for the purpose to remove contamination cannot be predicted in sensitive and protected areas, karst areas, as well as in close proximity to water source protection zone or in areas where underground abstraction of drinking water is done.

In addition, prior to the preparation of preliminary design for the basins, it is necessary to obtain water management requirements of the relevant water management authorities, and fully comply with all the conditions and demands set out in the water management act.

The most common types of basins are: dry basins with extended detention and wet basins with extended detention. Schematic overview of the basin is shown in the figure below.

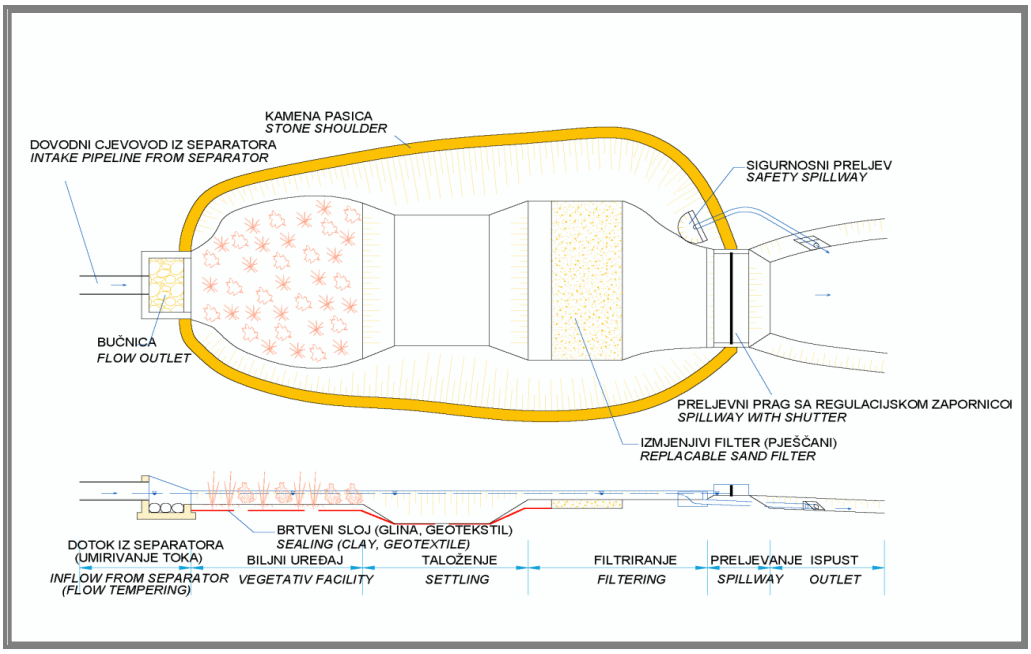

Figure 14: Schematic overview of the basin with extended detention

19.1.6.1. Dry basins with extended detention

Dry basins with extended detention are basins which do not need a steady stream of rain water and can be applied in the following cases:
- when particularly high pollution of the recipient is expected (usually when the medium daily traffic volume is over 30,000 vehicles / day);
- When the water management authorities seek not to disturb the water regime due to change of land use.

The land required for the dry basins with extended detention amounts of 0.5-2.0% of the total catchment area. Most commonly located within expropriation zone of the motorway, these lagoons are geometrically narrow and elongated. The construction of these basins is necessary to be provided in the permeable soil, for the water to filter into underground, but with the exception of areas which are listed in section 19.1.6 of this document. They can be placed next to the foot of the embankment, in a wide central reserve or in open areas of interchanges. The upper limit for the application of dry basins with extended detention is catchment areas of 20-30 hectares. For larger catchment areas, application of wet basins is more suitable.

19.1.6.2. Wet basins with extended detention

Using the constant presence of water from rainwater inflow from the carriageway, wet basin removes conventional pollution through deposition, biological degradation and vegetative filtration. Biological processes that take place in the basin remove metals and dissolved nutrients such as nitrates and orthophosphates. Wet basin with extended detention are used to remove heavy metals and suspended solids from storm water, provided that removing of oil and grease was previously done.
Wet basins can also be regulating facilities and control the inflow over so-called living detention volume above permanent working level. The wet basin is suitable for use in

catchment areas with a reliable source of water of more than 4 hectares, to a maximum of 260 hectares. For wet basins a reliable source of water should be provided throughout the year. Because of the potential loss, water of the basin must be located on poorly permeable soil, or provided with a geomembrane or clay liner. For wet basins it is necessary to provide 1-3% of the corresponding catchment areas.

19.1.6.3. Maintaining the basins

Regular checks are required for a leak over the embankment, deep-rooted vegetation and erosion along the embankment and side of the basin. If the basin is not well maintained, the water can become stagnant, covered in algae and floating waste, smelly with a lot of insects. Over time, the accumulation of sediments can significantly reduce the capacity of the basin. The sediment can reduce the amount of storage in the basin to 20% in the period of 10 years. The sediment should be examined to determine whether it is a hazardous material.

19.1.7. Culverts

The "2005 Guidelines "[15] provide detailed guidance for the design of culverts. During the development of preliminary design it is required to comply with all the instructions presented in this chapter of the 2005 Guidelines.

19.1.8. The discharge of water from the external and internal drainage systems

Depending on local conditions, the collected water from the carriageway can be discharged into the public sewer system or into natural recipients.

In the case of a discharge of water from the internal drainage into the public sewerage system, the technical documentation must be prepared in accordance with previously obtained conditions of the competent public utility company. These conditions will define the place of connection, height levels and the way connection to the public sewerage system should be designed and carried out.

In the case of a discharge of water from the external and internal drainage into the natural recipient, an outlet structure should be provided whose mission is to drain collected storm water and accelerate their mixing with water in the recipient. Structure at the outlet has to be protected against undermining and demolition, so it is necessary to reinforce the bank in the surrounding of the outlet.

The outlet should be positioned so as to take into consideration the level of major recipient waters (natural water). In this way, backflow of water into the drainage system is prevented, or free drainage of water from the system is enabled during the high water level in a natural recipient. In addition, it is necessary to pay special attention in the design and construction of a drainage system to the section between the outlet and the recipient (Figure15).

[15] Volume I-Design, Part 3: Designing road constructions, Chapter 2: Culverts

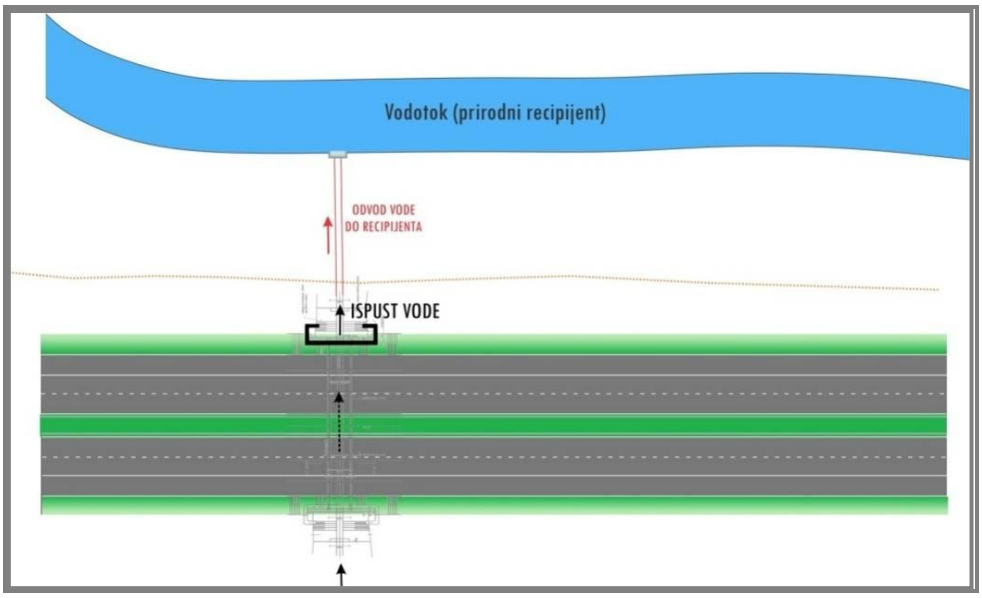

Figure 15: Drainage system on the section between oulet and recepient

Conceptually, the drainage system on the section from the outlet (*ispust vode*) to the recipient depends on the location of the recipient and discharges from the system of external and/or internal drainage and terrain configuration. Accordingly, the drainage system in this part can be designed as a closed system (the system of collectors) and / or an open system (open channels). During the preparation of project design and construction of storm water drainage system from outlet to the recipient, the requirements and regulations presented in section 19.1.2 (in case of open channels) and/or section 19.1.3 (if it is a system of collectors) of this document need to be complied with.

If the recipient for acceptance of storm water from the external and / or internal drainage is a long distance from the place of discharge or is not available, when deciding on solution for discharging the water, it is possible to consider the solution of discharge with "drainage wells." Before making such a decision, it is necessary to make appropriate hydrogeological study of the soil, and only in the case of well permeable soils and low groundwater levels a solution with the "drainage wells" may be provided.

Sizing of "drainage well" is performed in accordance with the available parameters (depth, water-permeable soil, the amount of water that is accepted from the culvert, etc.). One example of "drainage well" depicted at the exit of a culvert, ie. system of external drainage, is shown in the picture below.

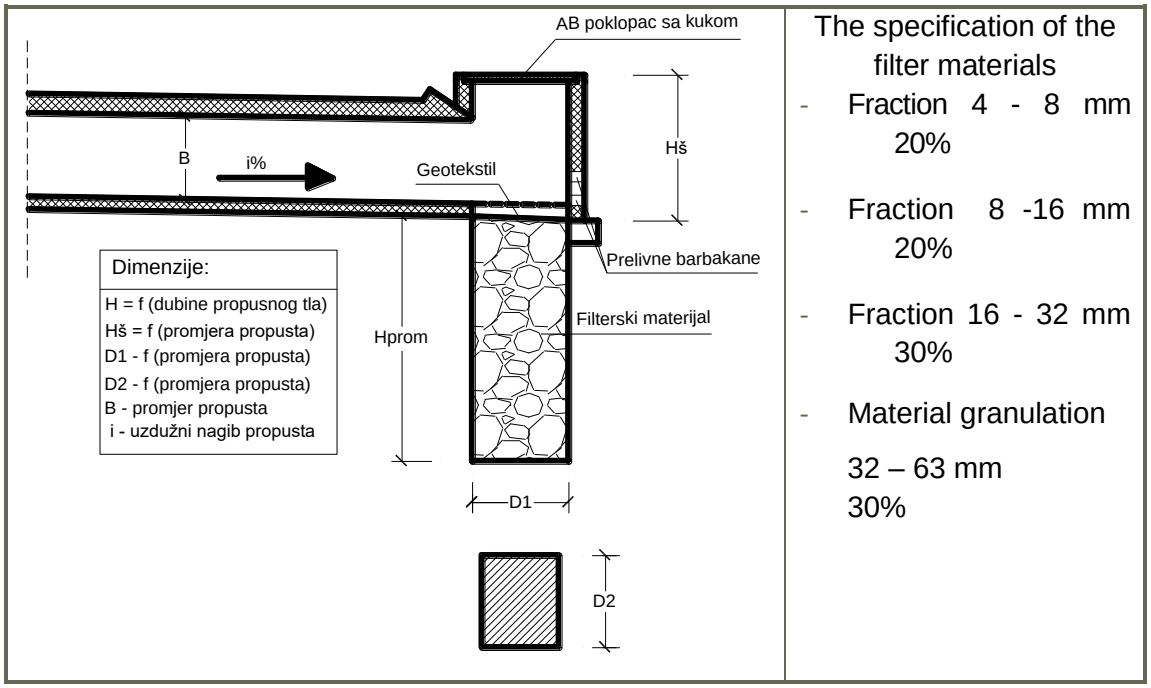

Figure 16: An example of a detail of drainage well on the exit from the culvert

19.2. The system of drainage of motorway structures (bridges, viaducts, underpasses and overpasses)

Introduction

System of drainage from the motorway structures (bridges, viaducts, underpasses, overpasses etc.) is one of the most important elements in terms of safety in traffic, but also the protection and durability of the structure. Adequate solutions of drainage from the structures ensure the projected lifetime of the structure, but also reduce the maintenance costs of the structure.

Among other irregularities of performance of individual parts of structures (for example, poor performance of waterproofing, concrete segregation, etc.), most of the damage to structures is caused by poorly designed, constructed or maintained drainage system. In order to improve traffic conditions, protect structures and environmental, it is necessary to design and build a drainage system which will carry out controlled drainage from the structures.

The system of drainage of the motorway structures includes several parts or subsystems, which are:
- Part of the drainage system from traffic areas (drainage from the carriageway);
- Part of the drainage system with a reinforced concrete slab - a part below the hydro-insulation and release of the steam pressure (drainage of leachate water);
- Part of the drainage system of embankments behind abutments;
- Connection of the drainage system from the structures to the public sewerage system or natural recipient.

Conceptually, the system of drainage from the motorway structures consists of longitudinal and vertical pipes through which water can flow to the nearest recipient.

For smaller structures (structures up to 20 m, for example, structures on the motorway service roads, etc.) it is sufficient to provide drains or open channels for drainage in front of and behind the bridge. For larger structures, surface water collects in built in gullies, whose number and arrangement is determined by hydraulic calculation, and is lead through pipes outside the structure.
During the planning and design of the drainage system, one of the basic rules is that: all elements must be available for inspection and cleaning, replaceable, and that they must not "interfere" with the load-bearing structure in the area of the main reinforcement and cables for pre-stressing of the structure. Also, conditions of adequate drainage of water from the carriageway are appropriate gradients and evenness of the pavement. Transverse gradient of carriageway should be a minimum of 2%, provided that the recommended gradient is 2.5%.

19.2.1. Elements of the drainage system of the structures

Elements of drainage system of the structures:
- Gullies
- Drainage pipes (longitudinal collecting pipes and vertical pipes) and associated fittings (joints, branches, elbows, etc.) and elements for hanging and fixing of pipes for the construction (rods, clamps, screws);

<u>Gullies</u>

Gullies are among the most important elements of drainage of the structures and consist of: grating, bucket for waste and lower part of the gully. Given that there are several types of gullies in the function of installation, it is recommended to use the gullies with direct vertical runoff, favorable from the viewpoint of efficiency with the evacuation of the relevant flow, and maintenance and management in the operational phase of the structure. Considering the above, the following describes the characteristics of the gullies with direct vertical runoff.

Gullies must have a possibility of subsequent regulation of the grating position for height and angle. In order to be able to adjust to corrections of pavement structure (eg. for replacing the asphalt), it is recommended that they have the possibility of horizontal displacement. Also, they must have a lattice zone of width ≥80 mm which are used to connect to the insulation (the establishment of continuity of insulation).

The distance between the gullies on the structures depends on the longitudinal gradient of the carriageway panel and is determined by hydraulic calculation, provided that the distance does not exceed 25 m. On the dilatation points, it is necessary to set the gullies of the mutual maximum distance of 4 m from the dilatation and thus reduce the flow of water into it.

Depending on the design of the structure, the choice of form and type of gullies shall be made. Mounting of gullies must be carried out entirely according to the description given in the "2005 Guidelines" [16] with the following amendment: When developing design solutions and installing lower part of the gully, it is necessary to foresee an extension of the drain pipe of the gully. This is achieved by welding the pipe section from the ductile iron to an existing gully pipe. Welded pipe length depends on the thickness of the pavement panel of the structure, provided that the total length of the gully pipe (gully pipe+ the weld part) comes about 10 cm below the lower edge of the reinforced concrete slab. The aim of the extension of the gully pipes is to enable the smooth joining of the gully to the collecting longitudinal drainage pipes. The minimum inner diameter of the gully drain pipe is 125 mm.

Gullies and cleaners (counter-gullies that are installed at a maximum distance of 70 m) **Error! Bookmark not defined.** are mounted directly above the collectiing longitudinal pipes nd these are connected at an angle of 45º. Joining / connecting the gully drainage pipe with collecting longitudinal pipes can be done as follows:
- Connect the gully drain pipe and drain branches with CE connector (Figure 17, detail 1);
- Connecting branches with longitudinal collector pipes under angle of 45 °,

Connecting/ joining of the gullies and collecting longitudinal pipes under angle of 45 ° is more favorable from the hydraulic point of view, because during stronger precipitation (when large amounts of water occurs), reduces the possibility of "congestion" of the pipeline at the connection point (Figure 17).

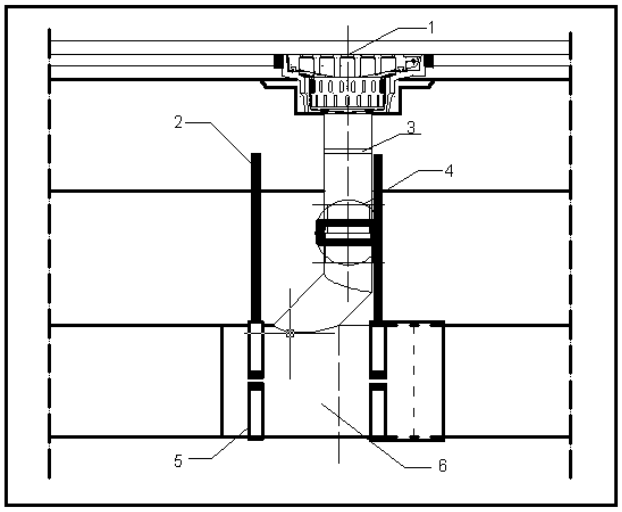

1- Gully
2- Pole
3- Gully pipe
4- Detail 1: Connection of the gully and a branch with CE joint
5- CE joint ($DN_{collector}$)
6- **Branch with an elbow DN_{gully}/ $DN_{collector}$**

Figure 17: Connection of the gully and branch to the longitudinal collector on the structure

Detail of the connection of the gully and branch with CE joint is given in the following Figure, s well as 3-D image of CE joint.

[16] Volume I- Designing, Part 2: Bridge design, Chapter 5: Drainage and canalisation of road structures

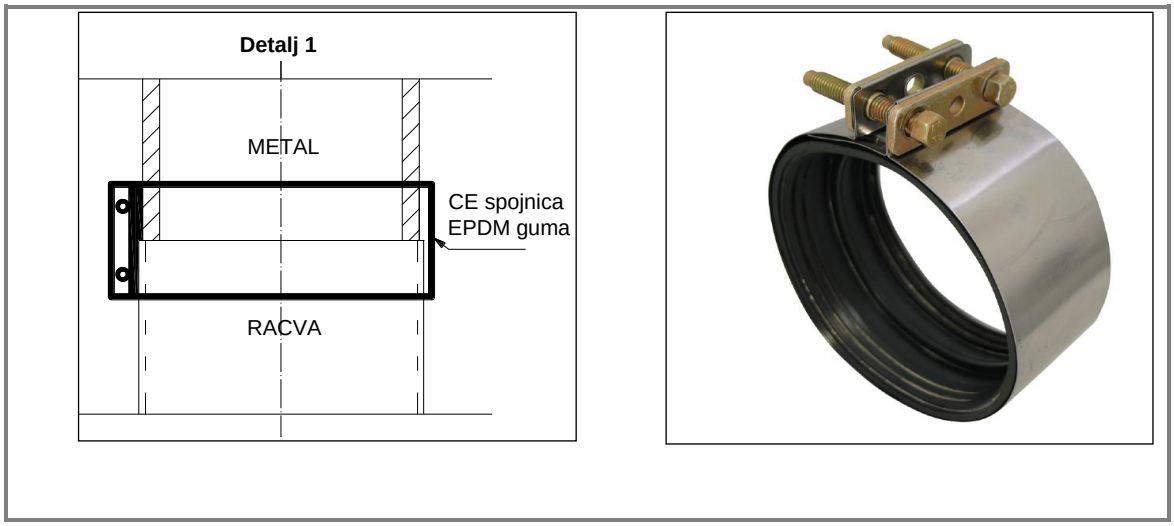

Figure 18: Detail 1: Connection of the gully to the branch with CE joint and 3-D image of the joint

When selecting a CE joint (as a flexible transition piece) that is installed to connect the gully with with the branch, CE joint characteristics must be according to standards BAS EN 877: 2001 and BAS EN 877 / A1: 2009.

The material used to made CE joint is Rostfrei "A4", and in the inside of the CE joints is EPDM rubber. In order to fully achieve water tightness at the connection, when selecting the CE joint a relation between DNgully / DNbranch must be taken into account. In practice it is very often the case that the diameter of the gully pipe is DN 150 mm, while the diameter of the branches at the point of connection is DN 160, and thus in selecting the CE joints, it is stated that it is an Inox CE joint DN150/DN160 mm. Within the gully the installation of buckets for waste reception is required, which prevents the penetration of backfill material and/or other particles in the collector of drainage system.

Gullies with direct vertical runoff are positioned along the pavement curb, which can be with one-sided or double-sided slope. Amount of the leakage of gully water depends on the type of grating (size, surface, shape of the grating) of road surface, slope, etc. Flow capacity of the gully is at least 10 l/s. Gully grating is designed to allow safe traffic on the road. The outer edge of the grating has to be 1.0-1.5 cm away from the curb / New Jersey barrier to prevent collection and leakage of water next to the gully.

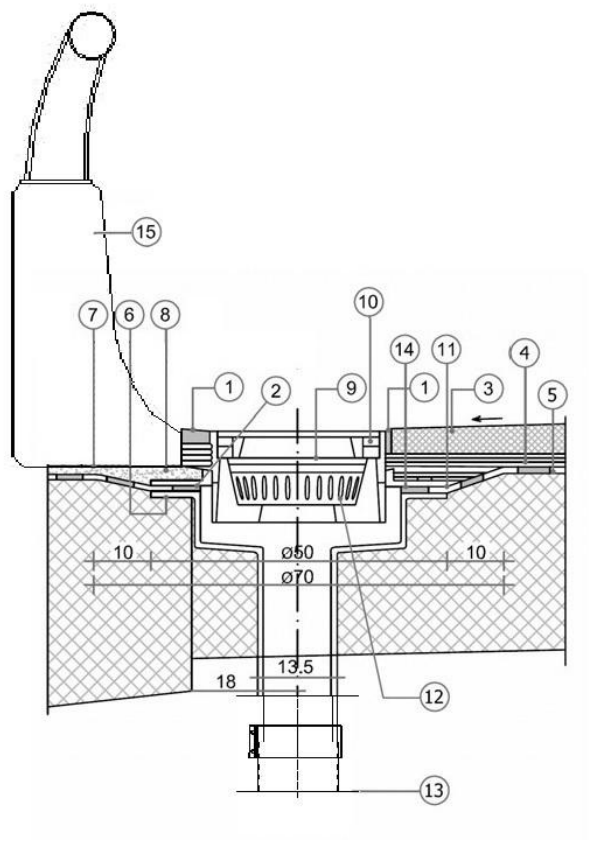

1- Mass for sealing junction
2- Isolation below the hall
3- Wearing course
4- Protective course
5- Hydro-insulation
6- Perforated metal sheet
7- Filter from one-fraction concrete with synthetic resin
8- Separation layer
9- The gully with direct runoff
10- Screw of stainless materials for the separation of the barrier
11- Isolation fitting to the flange of the gully
12- Basket for deposition of waste
13- Branch with CE joint
14- The previous coating
15- New Jersey barrier

Figure 19: Detail of the gully with one-sided slope and New Jersey barrier

As indicated in Figure 19, on the points of connection of the gully (gully grating) with the curb/ New Jersey barrier and an asphalt surface, it is necessary to set a permanently elastic sealant / bitumen mass for sealing the entire grating and thus avoid water penetration at the joints.

Joint with elastic bitumen mass or elastic sealer must be resistant to chemical and physical influences, such as oil and fuel, temperature changes (low and high temperature), and the effects of salt or solution based on sodium chloride (NaCl) and calcium chloride (CaCl2). Also, bituminous sealing mass should be enriched with polymers, of high adhesion, i.e they are used to seal cracks, open joints on asphalt and concrete surfaces, and open joints between asphalt and concrete.
In project designs, when choosing a position of the gully with direct vertical runoff, care should be taken that the gully is not far from the barrier or the curb because, in this case, part of the asphalt surface between the gully and the barrier / curb should be made in counter-gradient relative to the gradient of the carriageway. Due to the complex technology of works, it frequently happens that this part of the asphalt surface is constructed in the same gradient as the gradient of the carriageway, which results in water retention between the gully and the barrier/curb of the structure.

19.2.1.1. Pipes for the collection and drainage of water

The pipes for the collection and drainage of the water from the structures can be: the collecting longitudinal and vertical. Angle of the connection of the gully drain pipe to the collecting longitudinal pipes is made via the branches at an angle of 45 °.

Collecting longitudinal pipes accept water directly from the gully (carriageway with a single-sided slope). The minimum internal diameter of the collecting longitudinal pipes is 250 mm, while the minimum slope of the longitudinal collecting pipes should be 1%. The installation of duroplastic pipes is recommended, reinforced with glass fibers, which are produced by the method of centrifugation - CCGRP, under the provisions of BAS EN 14364: 2014 and B 5161. Also, all the fittings that are used during the development of the drainage system, (joints, additional fittings, elbows, branches etc.) must comply with the conditions laid down in BAS EN 14364: 2014 and B 5161.

In structures of great length, **vertical pipes** are as a rule set by the columns. The rule is to be fastened against the columns, and not to be placed inside the stairs as this would make it impossible to maintain them. Installation of vertical pipes is made in a straight line along the columns, with expansion joints every 20-30 meters in case of very tall structures. At the bottom of the stairs, it is necessary to predict the pouring manhole used for receiving the energy of falling water, as well as to maintain and clean vertical drainage pipes. Diameter of the pipes is determined on the basis of detailed hydraulic calculation.

At points of expansion joints and vertical joints (joint of abutment and span structure) a flexible pipe piece (EPDM rubber) should be set to the pipeline, so that the pipeline could move along with the movements of the bridge, and to avoid the appearance of additional stresses in the pipeline.

Drainage from the expansion joints, reservoirs, leachate drainage and release of steam pressure is discussed in detail on "2005 Guidelines."

<u>Terms of placing and fixing the pipes to the structure</u>

Terms for placing and fixing the pipes to the structure are given in the "2005 Guidelines." Collecting longitudinal pipes should be attached to the lower part of the structure panel by suspension. Suspension of collecting longitudinal pipe to the structure is done using threaded rods, which can be installed vertically (vertical threaded rod) or at an angle (oblique threaded rods). Installing threaded rods is done in the way that the bottom of the reinforced concrete slab of the structure performs anchoring (drilled blind) of the threaded rod, while the other side of the threaded rod is screwed onto the clamp placed around the longitudinal pipes.
The strength and stability of the threaded rods are to be determined on the basis of the calculation in the case that the collecting longitudinal pipes in full profile are filled with water. To determine the spacing and number of rods, it is necessary to carry out structural analysis and determine the number of the rods, so that the support does not exceed the allowable load, and taking into account the movements of the supports. Also, for the fittings / branches,

it is necessary to set up mutually threaded rods. Detail of the hanging assembly of longitudinal pipes with vertical threaded rods is shown in Figure 20.
For all elements of the joint it is necessary to check the voltage, and then adopt elements dimensions. In selecting the dimensions of the elements, care should be taken not only on the capacity utilization of the full pipeline (filled with water) but also on additional influences, such as vibration, temperature fluctuations as well as the possible load of regular maintenance and servicing.

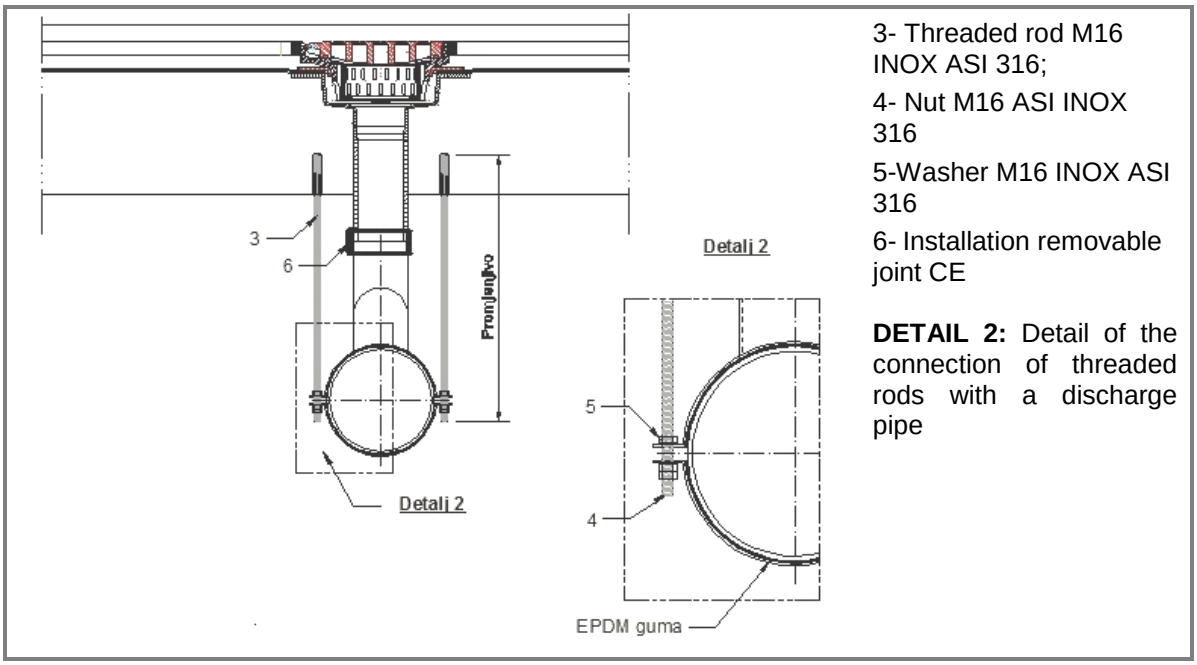

Figure 20: Hanging of the pipes to the lower part of the structure

Elements of suspension and support are to allow regulation of height which is realized through the clamps and screws on the vertical supports. All the elements for suspension and support, i.e. fixing of the pipes must be made of materials Rostfrei "A4".

19.2.1.2. Technical requirements for the design and construction of elements of the drainage system of structures

Overview of the basic technical characteristics of the elements of the drainage system of structures is given in the following table. These must be followed during the design and construction, all in accordance with the applicable regulations and standards.

ELEMENTS OF THE DRAINAGE SYSTEM OF STRUCTURES		
DESCRIPTION	**CHARACTERISTICS**	**Relevant standards/norms**
GULLIES		
Location	- Along New Jersey barrier/curb (Figure 19);	„2005 Guidelines“Error! ookmark not defined.
Dimensions and basic conditions	- Schedule of gullies must be determined by the hydraulic calculation; - Minimum one gully to 400 m2; - At slope> 1% maximum distance amounts to 25.0 m, and 10.0 m if the cross slope is 2.5% and longitudinal slope 0.5%. - Gully discharge pipe min. DN 125 mm; - Dimensions of the gully to be determined by hydraulic calculation.	„2005 Guidelines“
Materials	- The lower part of the gully body ("hat") of ductile iron with bituminizing coating; - Gully gratings: ductile iron grating with bituminizing protection, load classes DN 400 kN, with transportation lock and additional anti-theft locking; - Basket for the acceptance of waste, made of stainless steel, - The drain pipe from the gully, ductile iron with bituminizing protection.	BAS EN 124:2002/ DIN 1229, DIN 4052-C3 BAS EN ISO 1461:2010
Type of performance	- All parts of the gully are installed prefabricated.	„2005 Guidelines“
CONNECTING LONGITUDAL AND VERTICAL PIPES AND ELEMENTS FOR SUPPORT NAD HANGING OF THE PIPES		
CE JOINT	- It is installed to connect the gully pipes with branches on longitudinal collecting pipes; - Material: Stainless Steel -Rostfrei "A4", and the inside of the CE joints is EPDM rubber, diameter DNgully / DNbranch.	BAS EN 877:2001 BAS EN 877/A1:2009

ELEMENTS OF THE DRAINAGE SYSTEM OF STRUCTURES		
DESCRIPTION	**CHARACTERISTICS**	**Relevant standards/norms**
SCREWS, NUTS AND RODS, CLAMPS	- Fixing the pipes and fittings to concrete construction; - The distance between rods is determined by static calculation. It is recommended that the distance between the rod does not exceed 3 m; - The inside of the clamp should have the EPDM rubber, which is resistant to salt and UV radiation; - The connection between the concrete structure and threaded rods should be done at an angle of 45 or 90^0 , depending on the calculation; - Material: Stainless steel - Rostfrei "A4".	BAS EN 10088-2:2007 BAS EN 10088-3:2007 BAS EN 10088-4:2010 BAS EN 10088-5:2010
LONGITUDINAL AND VERTICAL PIPES	- Pipe diameter is determined by hydraulic calculation, minimum internal diameter is DN/ID 250 mm for the longitudinal and vertical pipes; - Material: - Pipes of reinforced polyester produced by a process of centrifugation - CCGRP, which are resistant to salt and external influences (UV radiation, cold, temperature changes, etc.); - All connecting materials that are used to connect the longitudinal and vertical pipes should be made of reinforced polyester obtained by the process of centrifugation - CCGRP), and fulfill the same requirements as those stipulated for that type of pipes; - Quality of the work on longitudinal pipes is proved by CCTV inspection. Before the CCTV inspection of longitudinal pipes of drainage system, it is necessary to make cleaning and flushing of the pipeline at a pressure of at least 150 bar (nozzle pressure).	„2005 Guidelines“ BAS EN 14364:2014 i B 5161 BAS EN 13508-1:2014 i BAS EN 13508-2+A1:2012
ELEMENTS OF LEACHATE DRAIN AND STEAM PRESSURE RELIEF		
- Ductile iron pipes should be spread throughout the insulated location, so that they are at the lowest point of the carriageway, for example. Along the corridor (25 cm from the curb) at a distance from 3.0 to 10.0 m depending on the longitudinal slope of the carriageway. - About 15-25 m2 of the area of the structure belongs to one pipe	„2005 Guidelines“Error! ookmark not defined. C.B5.226	
CLEARANCE AND MAINTENANCE OF THE DRAINAGE SYSTEM OF THE STRUCTURES		
- Cleaning and maintenance of drainage system of the structures need to be made in accordance with the instructions for cleaning and maintenance of rainwater collectors; - Flushing of the pipeline carried out under pressure of at least 150 bar (nozzle pressure).	Instruction on maintaining the system, prepared by the manufacturer and delivered to the end user.	

ELEMENTS OF THE DRAINAGE SYSTEM OF STRUCTURES		
DESCRIPTION	**CHARACTERISTICS**	**Relevant standards/norms**
		„2005 Guidelines“Error! ookmark not defined.

Table 4: Technical requirements for the design and construction of elements of the system of drainage from the structures and overview of the applicable norms

19.2.2. Hydraulic calculations of drainage from the structures

Hydraulic calculation of rainwater drainage system (amount of water, the number and spacing of the gullies, dimensioning of collecting longitudinal and vertical pipes, etc.) from the structures is given detail in the " 2005 Guidelines." **Error! Bookmark not defined.**

19.2.3. Treatment and discharge of water from the drainage system of the structures

Treatment and discharge of water from the drainage system of the structures must be carried out in accordance with the water management requirements. These requirements relate to the prevention and reduction of pollution of water and soil that reach from the carriageway. Since the structures on the motorway along with motorway route are a single unit, it is necessary to comply with all the requirements, conditions and regulations specified in Section 19.1 of this document.

19.3. Drainage in tunnels

Introduction

Design solution for the drainage system of the tunnel should be conceived so that all liquids, that in any way, get on the carriageway, and other surfaces inside the tunnel, are collected and control guided toward the tunnel portals in the shortest route and further to the recipient, i.e. the device to accept or treat collected water from the motorway. Drainage of the tunnel shall be designed in a way that involves the construction of a drainage system for the reception and evacuation of groundwater and leachate, and the reception and evacuation of accidental spills.

19.3.1. The system of external drainage - lateral drainage

External drainage of the tunnel system includes lateral drainage with perforations at 220˚ (water reception zone 200 cm^2/m") which have the purpose of accepting rock (underground) water along the tunnel. In order to ensure adequate cleaning, maintenance and functionality of the lateral drainage, construction of inspection niches is planned at maximum distance L ≤ 60.0 m. In the case of non-functioning (blockage) of lateral drainage system (at any point in the cross section), it is necessary to predict the transverse links with a goal to evacuate ground water in the zone between the primary and secondary support. Cross-links are

positioned at the pipe perforations of lateral drainage, and have the overflow function. Pipes of cross-links are performed without perforations with a minimum slope of 2% and an internal diameter DN/ID 200 mm. All cross links that pass through carriageway in the tunnel should be conducted in a way that includes the creation of the concrete base and RC coating around the pipe. The quality of the concrete for the construction of concrete base and RC coating is C25/30. Reinforcement is made using reinforcement mesh Q188. The thickness of the concrete base is about 10 cm, while the minimum thickness of the RC coating is 15 cm. Image of the lateral drainage (section and base) with the inspection niches is presented below.

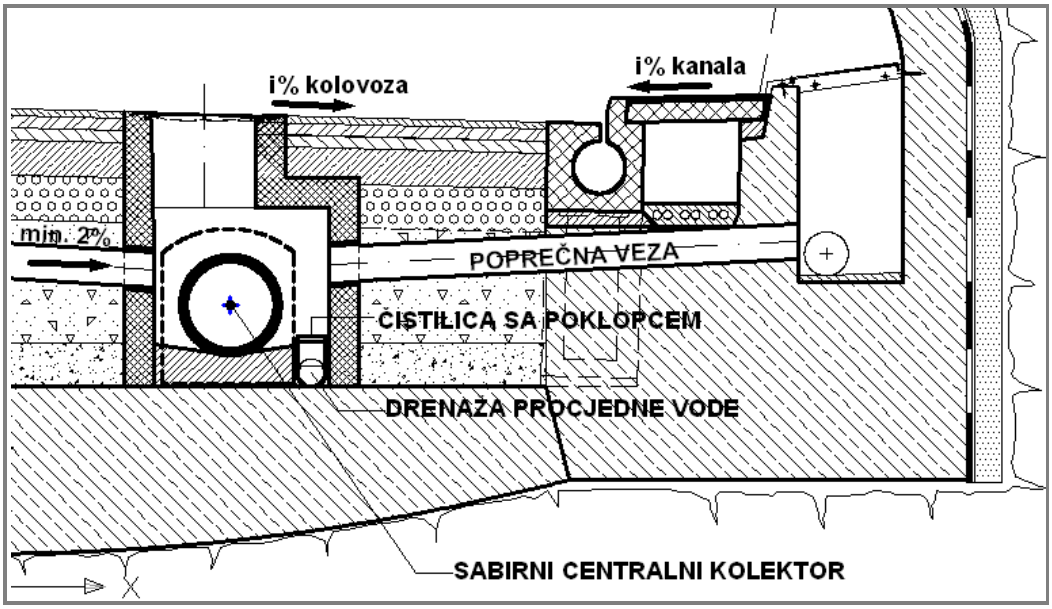

Figure 21: Lateral drainage with connection link to the central collector – Cross-section

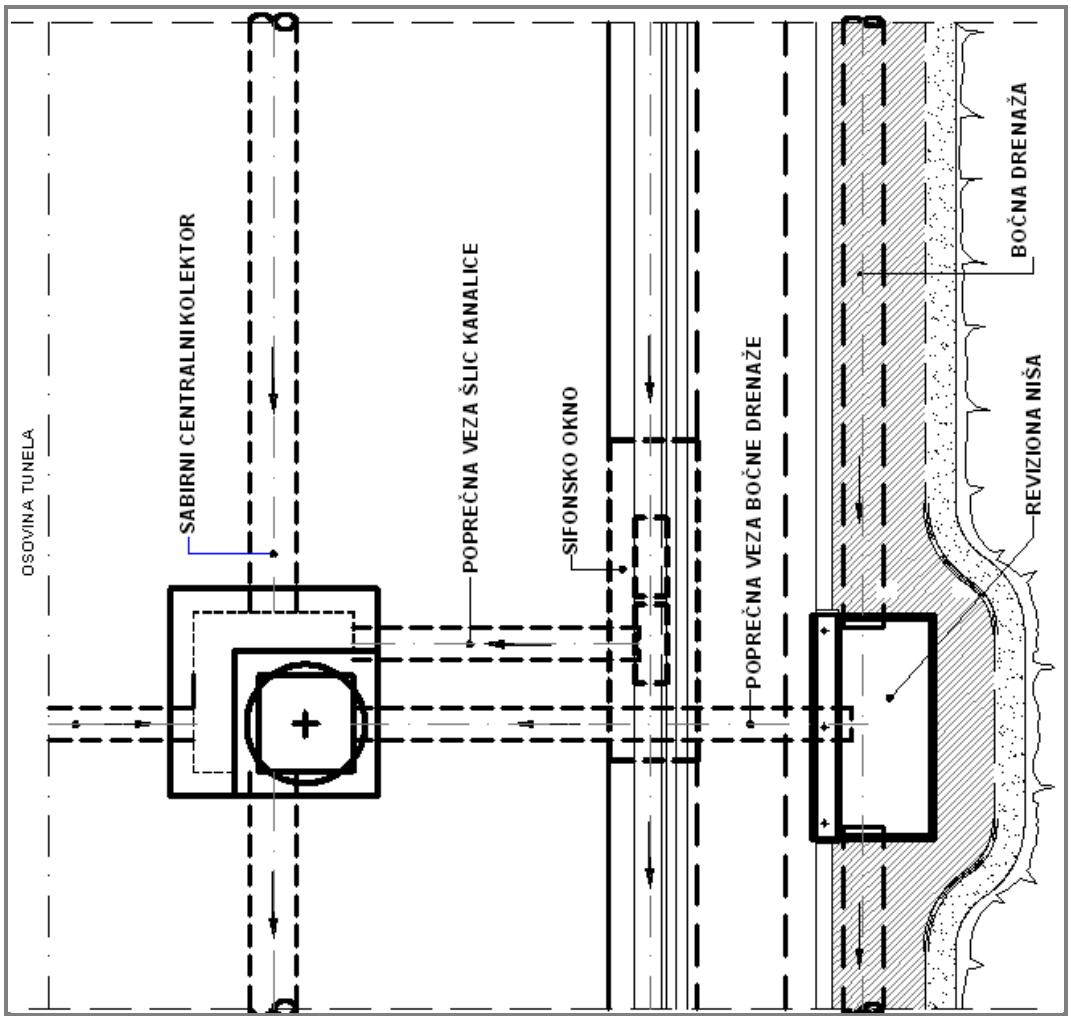

Figure 22: Lateral drainage with connecting joint to the central collector- Base

In the development phase of project design, pipe diameter of lateral drainage is determined by hydraulic calculation, in accordance with available data on the quantities of groundwater. The design documentation needs to provide a longitudinal profile of the lateral drainage pipe, cross-section, base with the details of the performance and specification of the pipe material, which should be fully in accordance with DIN 4262-1, BAS EN 14364: 2014 and ÖNORM B5161, BAS EN 1401- 1: 2010 and BAS EN 1852-1: 2010, depending on the choice of materials.

In the construction phase in the tunnel (tunnel boring and making of primary lining), and before the construction of lateral drainage it is necessary to monitor the quantity of groundwater and do additional hydrological tests, based on which design hydraulic calculation must be checked.

In addition, during the construction phase it is necessary to examine the quality and quantity of groundwater (which flow to the lateral drainage) and perform an analysis of the possibility of using water from the lateral drainage for the purpose of water supply of the tunnel (water for fire protection). All possible additional works and activities incurred in adapting the system of external drainage to the situation on the ground must be included in the bid amount of basic works.

In the construction phase special attention should be paid during the concreting of inspection niche and pipe flume, in order to prevent penetration of concrete and cement milk into the lateral drainage system. Lateral drainage pipe installation is done in a way that on the previously cleaned concrete surface a layer of concrete is installed, and after placing the pipe into fresh concrete, start the making of concrete flume. Built-in lateral drainage pipes are covered with drainage concrete.

Drainage (porous) concrete is made of cement, fraction 16/32 mm and water. The amount of water used must not exceed the amount necessary to cover all the particles of aggregate and cement. The quality of the built in lateral drainage is proved by CCTV inspection including crosslinking.

19.3.1.1. Technical requirements for the design and construction of lateral drainage in tunnels

Overview of the basic technical characteristics of the system of external drainage – lateral drainage is given in the following table. These must be followed during the design and construction, all in accordance with the applicable regulations and standards.

EXTERNAL DRAINAGE SYSTEM - LATERAL DRAINS		
DESCRIPTION	**CHARACTERISTICS**	**Relevant standards/norms**
LATERAL DRAINS		
Location	- At the joint of the primary and secondary tunnel lining.	
Dimensions and basic conditions	- Pipe diameter is determined by hydraulic calculation, the recommended minimum internal diameter is DN / ID 200 mm; - The distance of inspection niches ≤ 60 m.	
Materials	**Lateral drain pipes:**	
	- Lateral drains should be made of materials with **a full wall,** perforations 220 ˚, perforation width 1.2 mm, and **peak stiffness** SN≥ 8 kN / m^2 and permeable capacity of 200cm2 / m '.	DIN 4262-1
	- Materials that can be used are: - Polypropylene pipes - PP with full wall and a smooth interior, Type R3, SN≥ 8 kN / m^2)	BAS EN 1852-1:2010 DIN 4262-1 Tip R3
	Inspection niches	
	- Reinforced concrete C30 / 37 with sulphate cement; - Cover on the inspection niches: Inox in full width of the opening of the niche; - Inox steps for access to the inspection niche;	BAS EN 124:2002 BAS EN 14396:2008
Quality of performed works	- CCTV inspection of completed works; - Before the CCTV inspection, it is necessary to make cleaning and flushing of the pipeline at a pressure of max. 360 bar (nozzle pressure), including chain-cleaning if necessary; - CCTV inspection is performed for the entire system including the transverse links;	BAS EN 13508-1:2014 BAS EN 13508-2+A1:2012
Maintenance	- All parts of the lateral drainage must be maintained regularly and at any time available; - Flushing and cleaning of the system must be performed every 3 months, or according to the instructions for maintenance of the system; - The quality of pipe material should provide stability at the flushing pressure of max. 360 bar (nozzle pressure), including a chain cleaning.	Instruction on maintaining the system, prepared by the manufacturer and delivered to the end user.
PIPES FOR TRANSVERSE LATERAL DRAIN CONNECTION WITH CENTRAL COLLECTOR		
Location	- The pavement of the tunnel (from inspection	

EXTERNAL DRAINAGE SYSTEM - LATERAL DRAINS		
DESCRIPTION	**CHARACTERISTICS**	**Relevant standards/norms**
	niches of the lateral drain to an inspection chamber of the central collector) - Longitudinal at each L ≤ 60.0 m of tunnel length;	
Dimensions	- The inside diameter of the pipe is determined by hydraulic calculation, the recommended minimum internal diameter of the pipe DN / ID 200 mm; - The minimum slope of the pipe 2%.	
Materials	- Pipes which are used for crosslinking should be made of materials **with a full wall**, without perforation, peak stiffness SN≥8 kN / m^2. The quality of pipe material should provide stability at the flushing pressure of at least 150 bar (nozzle pressure).	DIN 4262-1
	- Materials that can be used are: a) The thermoplastic material - Polypropylene - PP pipes **with full wall** and a smooth interior, SN≥ 8 kN / m2) - Polyvinyl chloride - PVC pipes **with full wall** and a smooth interior, peak stiffness SN≥ 8 kN / m2)	DIN 4262-1 BAS EN 1852-1:2010 BAS EN 1401-1
Quality of performed works	- CCTV inspection of completed works; - Before the CCTV inspection, it is necessary to make cleaning and flushing the pipeline at a pressure of min. 150 bar (nozzle pressure);	BAS EN 13508-1:2014 BAS EN 13508-2+A1:2012
Maintenance	- All parts of the cross-connection must be maintained regularly and at any time available; - Flushing and cleaning of the system is performed every 3 months, or according to the instructions for maintenance of the system; - The quality of pipe material should provide stability at the flushing pressure of min. 150 bar (nozzle pressure)	Instruction on maintaining the system, prepared by the manufacturer and delivered to the end user.

Table 5: Technical requirements for the design and construction of lateral drains and an overview of the applicable norms

19.3.2. Leachate Drainage system

To ensure the evacuation of the leachate from the tunnel, longitudinal filtration system and drainage shall be used. Drainage of leachate includes the creation of drainage layer of suitable thickness, including deep longitudinal drainage. During the performance of the leachate drainage system it is necessary to use drainage and lean concrete, filter materials, geotextiles and thermoplastic pipes of appropriate diameter. Since the drainage pipes for tunnel leachate pass through inspection manholes of the central collector, for the pipes for drainage of leachate inside manholes, it is necessary to provide cleaner with a cover. Leachate drainage system is performed with perforated pipes to the entrance of the inspection manholes and the part of the pipe passing through the inspection chamber and which is provided with cleaners with a cover, is made from the pipe without perforation (full pipe).
In this way, it is possible to prevent the return of water from the central collector to the drainage collector without eliminating the possibilities of the system inspection.

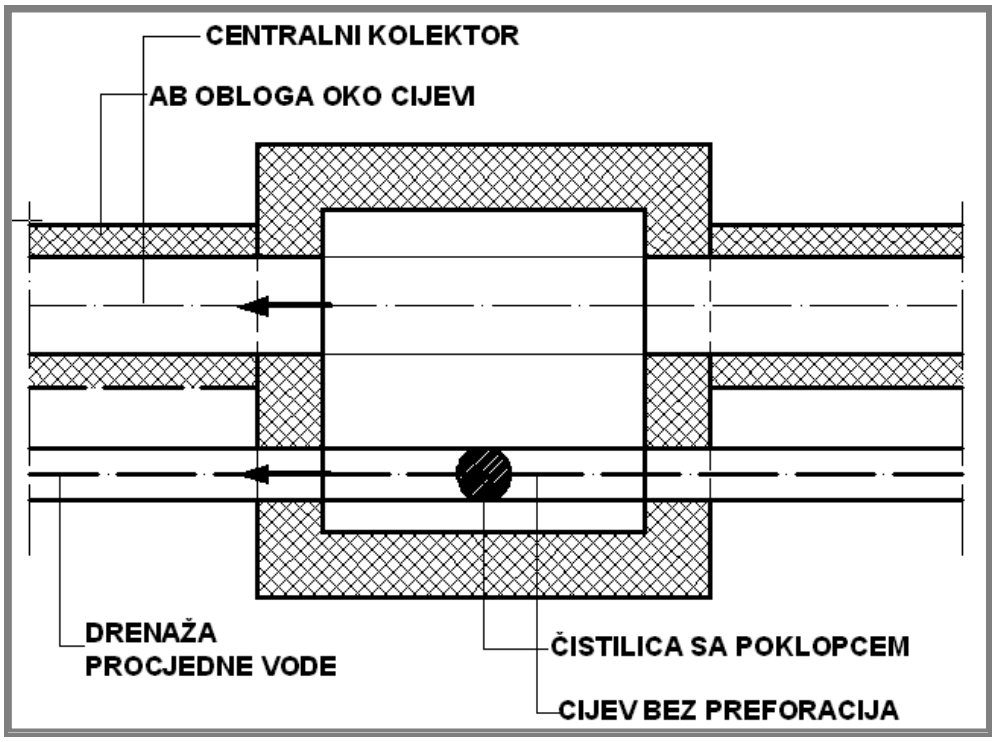

Figure 23: Detail of the leachate drainage

Schedule of the drainage layer should be such that, in the case of blockage of longitudinal deep drainage, it allows uninterrupted water filtering out of the tunnel construction at a certain period of time.

The discharge of leachate is carried directly to the recipient without further purification. In the case of connecting to other systems of drainage, it is necessary to predict protection against backflow. The quality of the built pipe system for leachate is proven by CCTV inspection.

19.3.2.1. Technical requirements for the design and construction of leachate drainage system

Overview of the basic technical characteristics of the leachate drainage system is given in the following table. These must followed during the design and construction, all in accordance with the applicable regulations and standards.

PIPES FOR COLLECTING LEACHATE		
DESCRIPTION	**CHARACTERISTICS**	**Relevant standards/norms**
Location	- Lower angle of pavement structure.	
Dimensions	- Pipe diameter is determined by the calculation, while it is recommended that the minimum internal diameter of the pipes is DN / ID 150 mm.	
Materials	- - Pipes need to be made of material with full wall, perforations 220˚, perforation width 1.2 mm, and peak stiffness SN≥ 8 kN / m2; - - Pipes that pass through manholes of central collector should be made of materials **with a full wall** without perforations, peak stiffness SN≥ 8 kN / m2 with the cleaner and a cover.	DIN 4262-1.
	Material used for the tubes: - Polypropylene - PP pipes with full wall and smooth interior, Type R3, SN≥ 8); - Polyvinyl chloride - PVC pipes with full wall and a smooth interior, type C2, peak stiffness SN≥ 8 kN / m2)	DIN 4262-1 Tip R3 BAS EN 1852-1:2010 BAS EN 1401-1
Quality of performed works	- CCTV inspection of completed works; - Before the CCTV inspection, it is necessary to make cleaning and flushing of the pipeline at a pressure of min. 150 bar (nozzle pressure).	BAS EN 13508-1:2014 BAS EN 13508-2+A1:2012
Maintenance	- All components must be regularly maintained and must be available at all times; - Flushing and cleaning of the system is performed every 3 months, all in line with the instruction for maintaining the system prepared by the manufacturer; - The quality of pipe material should provide stability at the flushing pressure of min. 150 bar (nozzle pressure).	Instruction on maintaining the system, prepared by the manufacturer and delivered to the end user.

Table 6:Technical requirements for the design and construction of leachate drainage system and overview of valid norms

19.3.3. Internal drainage system

Water from the pavement in the tunnel is collected through an open curb (continuous "slot" drainage channels). Continuous "slot" drainage channels are positioned on the lower side of the carriageway, i.e. they follow cross slope of the carriageway in the tunnel.
Internal drainage system consists of:
- Continuous "slot" drainage channel and
- Siphon inspection shaft with a septum and a lid;

Continuous "slot" drainage channels

Continuous "slot" drainage channels can be made as a monolithic (on-site) or mounted. In the case of monolithic performance of "slot" drainage channels, drainage channels are carried out in two parts. The first part of the continuous "slot" channels is RC channel of circular cross section, and the second part is a reinforced concrete slab with a curb. Technology of installation of continuous "slot" channel made on the site is as follows:

- Setting up of reinforcement points, which consist of reinforcement mesh Q188 and anchors Φ16mm;
- Installing double plating;
- Setting up of internal sliding plating made of steel pipe length of 12 m;
- Installation of concrete C35/45 with micro-fibers;

After a certain time from the completion of concreting tunnel liner of RC channel, sliding plating is drawn to the next tunnel liner. At the connection point between tunnel liners "groove" is left - continuation for the next tunnel liner. Sealing rubber is installed in the groove, whose function is to secure waterproofing of the joint between the two tunnel liners. Characteristics of sealing rubber must be fully in accordance with EN 681-1: 2003 (Elastomeric seals - Material requirements for seals for pipes used in water transport and drainage). Given that in this way the continuous "slot" channel consists of two connecting elements, it is necessary to ensure stability and waterproofing of the joint of lower part of the channel and RC slab. This joint should be done from sulphate resistant cement mortar in which the additives are added for waterproofing. Before installing the monolithic continuous "slot" drainage channel in the tunnel, it is necessary to do a test section with a length of two tunnel liners (24 m), with the installation of a reinforced concrete slab with a curb and examine the water tightness of all connections and stability of joined parts of the channel. It is important to stress that no matter what the continuous "slot" drainage channel is made in two parts, it is necessary to provide a compatibility and water resistance of elements as a whole. Cross-section of RC continuous "slot" drainage channel is shown in the following figure, while the technical requirements to be followed during the design and installation of channels are provided in section 19.3.3.1 (Table 7).

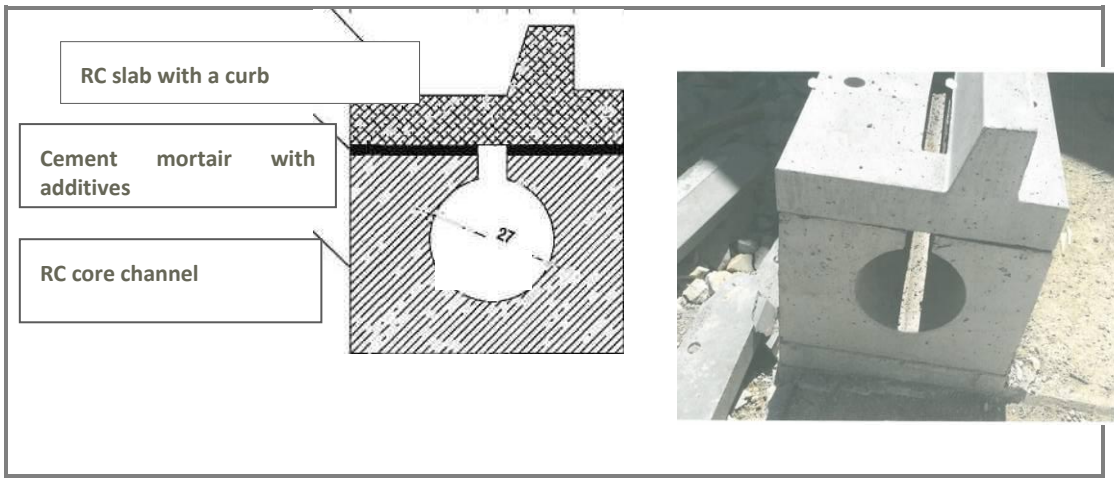

Figure 24: Image of continous ‘’slot’’ drainage channel

In the case of the construction of prefabricated continuous "slot" channels, it is necessary to ensure watertight connection between the prefabricated elements. At the connection between the two elements sealant is mounted (Polyurethane) which is resistant to chemical influences, and which provides the waterproofing of the connection between prefabricated elements.
Since the assembly of prefabricated elements ("slot" drainage channel) is performed on the base vault, it is necessary to adequately ensure the connection between the prefabricated channels and the invert, and stability of channels themselves. Also, when selecting a mounting of prefabricated continuous "slot" channels, the larger elements of length should be preferred, in order to reduce the number of joints that are potential weak points in the system. Before installing and adopting the methodology of works, it is necessary to do a test section with a length of 12 m, and to screen joints for waterproofing, as well as the stability of the elements.

Siphon manholes

The distance between siphon manholes should not be bigger than 65 m. Siphon manholes in the system of continuous "slot" drainage channel, in addition to the inspection, serve to prevent the spread of fire along the tunnel.

Height of transverse connections in siphon manhole must not exceed the height of the lower base course (buffer layer), scheduled as part of the construction of pavement. Given the above, it is necessary to define the height of the transverse links and the depth of the barrier inside the siphon manhole. The height difference between the angles of the exit of water from the siphon manhole and the bottom of the barrier, i.e. barrier immersion depth, should be at least 15 cm.

Internal drainage system is dimensioned in a way that guarantees the acceptance of the relevant inflow of 100 (l / s) on any grid of continuous "slot" channels. In addition to this key requirement, which relates primarily to the acceptance of the relevant quantities of accidental contamination, it is understood that the drainage system has been designed and qualified for unhindered reception of the relevant fire water quantity of 20 (l / s) or contaminated water during the washing of tunnel of the relevant 10 (l / s).

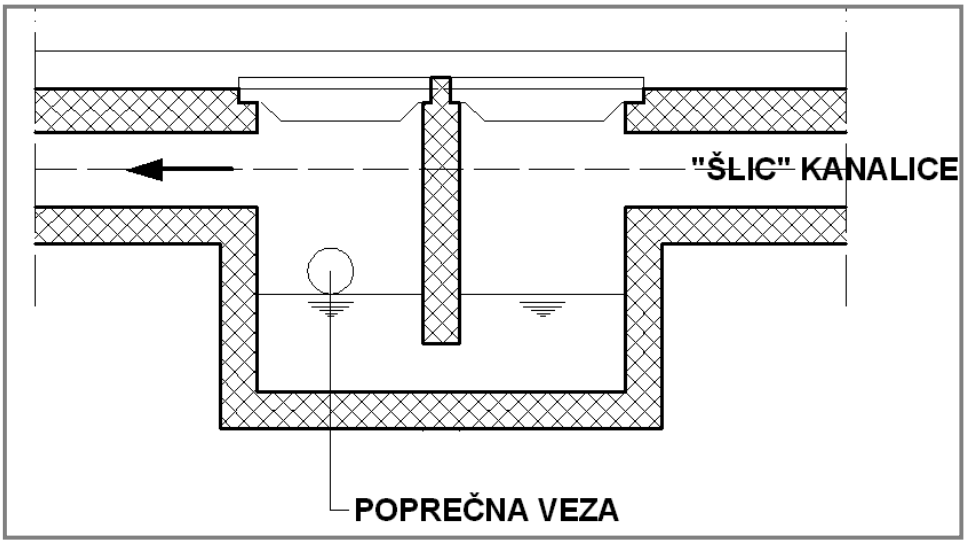

Figure 25: Detail of siphon manhole cross-linked to the central collector

Only in exceptional cases location of siphon manhole can be aligned with the inspection drainage niche. If siphon manhole is in the same line with inspection drainage niche, it is necessary to respect the conditions which prevent the possibility of backflow in the system of external drainage.

This condition defines the height difference between angles of entry and exit of crosslinking from siphon manhole:

$$K_{up} = K_{izvp} + 2 \times DN\ (OD) \tag{19.3.1}$$

where,

Kup – angle of entrance of crosslinking into siphon manhole (section: inspection niche – siphon manhole);

Kizpv - angle of output of crosslinking from the siphon manhole (section: siphon manhole – inspection manhole of the central collector**).**

DN (OD) - External pipe diameter

In addition to satisfying the conditions which prevent the possibility of backflow in the system of external drainage, it is possible to connect inspection niche with siphon manhole and thus reduce the total number of cross-linking in the tunnel.

19.3.3.1. Technical requirements for the design and construction of the internal drainage system

Overview of the basic technical characteristics of the system of tunnel internal drainage is given in the following table. These must be followed during the design and construction, all in accordance with the applicable regulations and standards.

INTERNAL DRAINAGE SYSTEM		
DESCRIPTION	**CHARACTERISTICS**	**Relevant standards/norms**
CONTINOUS „SLOT“ DRAINAGE CHANNELS		
Location	- Edge of the carriageway (on the lower side)	
Dimensions	- The diameter of the light opening is determined by hydraulic calculation; - - The minimum light opening DN / ID 200 mm, but needs hydraulic calculations leading to the adoption of appropriate dimensions.	
Materials	- Fiber reinforced concrete with plastic fiber content> 1.0 kg / m3 according ÖVBB guidelines for fiber reinforced concrete ; - Terms of resistance to cold, salt, and chemical-aggressive media must be followed with the obligatory use of sulphate-resistant cement and the addition of microsilica; - The required class of concrete is C35 / 45, XA3 / XD3, - Dmax = 16 mm F4 consistence; [11]; - Alternatively, the polymer concrete with equivalent features. The conditions are: bending strength ≥ 20 N / mm2 (middle value of 3 tests), water absorption 0 mm and PH value 2-12.	BAS EN 14889-2:2009. BAS EN 1433:2005 BAS EN 1433/A1:2010 BAS EN 1917:2007 BAS EN 1917/Cor2:2010 BAS EN 206:2014
SIPHONE MANHOLE		
Location	- At each L≤ 65,0 m' of internal drainage system.	
Dimensions	- Dimensions of siphon manholes should be determined on the basis of the calculation, depending on the arrangement of manholes and the amount of water collected through system of internal drainage.	
Materials	- Fiber reinforced concrete with plastic fiber content> 1.0 kg / m3 according to ÖVBB guidelines for fiber reinforced concrete ; - Terms of resistance to cold, salt, and chemical-aggressive media must be followed with the obligatory use of sulphate resistant cement and the addition of microsilica. - The required class of concrete is C35 / 45, XA3 / XD3, - Dmax = 16 mm F4 consistence [11]; - Alternatively, the polymer concrete with equivalent features. The conditions are: bending strength ≥ 20 N / mm2 (middle value of 3 tests), water absorption 0 mm and PH value of 2-12; - Cover of siphon manhole is full section, made of ductile iron-and without any holes. The siphone manhole inspection chamber must not be have grating or cover with the openings (holes)	BAS EN 1917:2007 BAS EN 1917/Cor2:2010 BAS EN 1433:2005 BAS EN 14889-2:2009 BAS EN 1433/A1:2010 BAS EN 206:2014 BAS EN 124:2002

INTERNAL DRAINAGE SYSTEM		
DESCRIPTION	**CHARACTERISTICS**	**Relevant standards/norms**
	because siphon manhole serves to prevent the spread of fire in the tunnel.	
Quality of performed works	- Before making pavement layers it is necessary to perform testing of waterproofing of the system. - Testing of waterproofing of the system follows the execution of all the connections, so that the entire system would be covered (connecting joints, slot channel and siphon manholes);	BAS EN 1610:2002
	- CCTV inspection of completed works is done for crosslinking, and "slot" channels. For siphon manholes a visual inspection of the works performed is done by the Supervision Engineer; - Before the CCTV and visual inspection, it is necessary to make cleaning and flushing of pipelines under pressure.	BAS EN 13508-1:2014 BAS EN 13508-2+A1:2012
Maintenance	- All parts of the system of internal drainage ("slot" channel and siphon manhole) must be regularly maintained and at any time available; - Flushing and cleaning of the system under pressure is performed every 3 months;	Instruction on maintaining the system, prepared by the manufacturer and delivered to the end user.

Table 7: Technical requirements for the design and construction of the system of internal drainage and overview of the applicable norms

19.3.4. Central collector

A central collector serves for evacuation of groundwater in case of non-functioning of lateral drainage system, as well as water from the carriageway (including accidental spills / pollution). Lateral drains are connected to a central collector by the overflow in the inspection niches and siphon manholes of continuous "slot" channels are connected to a central collector (at points of manholes) through crosslinks. Connection of cross-links is done at points of manholes of central collector.

The central collector must be sized taking into account the amount of ground water due to potential overflows from the system of external drainage and hydraulic parameters used when sizing a system of tunnel internal drainage. Technology of performance of the central collector, which is positioned in the middle of the traffic lane, includes the development of concrete base and RC coating. The base is constructed of the drainage (porous) concrete, in order to permit flow of leachate to the drain collector. To create RC coating around the pipes concrete strength class C25 / 30, Q 188 wire mesh and reinforcing bars (anchors) Φ16mm are used.
On the part of the tunnel where concrete invert is constructed (Figure 26), assembly of central collector pipes is made in such a way that anchors Φ16 mm are installed in the concrete invert, on which is then welded horizontal reinforced bar of the same cross-section. By applying this technology, better structural stability of collectors is achieved and drainage efficiency is increased, which is determined by construction of a continuous fall of the collector with minimal fluctuation to change the slope of pipelines during installation. After

that, concrete base of the pipes is made of drain concrete, and the installation of collector pipes is done on the horizontal bars. After assembly of the central collector pipes, the installation of wire mesh is done and concreting around the pipe.

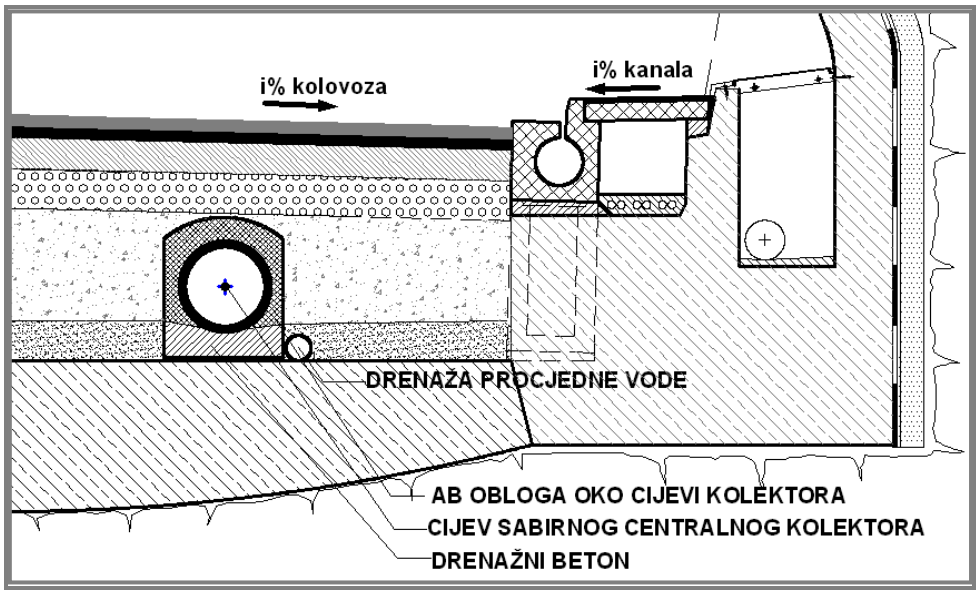

Figure 26: Detail of the central collector in the tunnel

On the part of the tunnel where the invert is not constructed, central collector is performed in a way to do a pre-excavation or filling of material to the bottom angle of the pipe on which the collector is mounted. Concrete base and RC coating around the pipe is performed in the same manner as at the part of the tunnel with the invert.

Inspection (control) chambers/manholes of the central collector

Manholes of the collector are made at a joint of cross connection to central collector at a maximum distance of L = 60 m. Inspection chamber consists of an inlet port and the working chamber, and can be made as mounting or monolithic. Given that they are placed in the carriageway, they must be made of concrete strength class C30 / 37. Manholes must be designed and constructed to withstand all loads to which they may be exposed during construction and operation of the tunnel without any loss to original purpose and environmental damage. Structural elements of manholes (plate thickness, walls, etc.) is determined by static calculation in the design phase.

Interior dimensions or diameter of an inspection chamber depend on the diameter of the pipes of the central collector. The minimum internal dimensions of an inspection chamber is 100x100 cm for manholes of square cross-section or Φ100 cm for manholes of circular cross-section.

In addition to the static resistance, manholes of the central collectors should satisfy the requirements relating to waterproofness and resistance to aggressive effects of chemicals.
Inside the manholes, Inox steps are mounted for access of workers to maintain the system. The bottom of the manhole is formed with concrete class C30 / 37 in the form of half-round gutter to direct the flow of waste water. At the inlet of an inspection chamber it is necessary to incorporate a circular manhole covers of the square frame.
Built in covers should meet the following:

- Minimum class of the cover should be D 400 (capacity 400 kN);
- The cover must not have ventilation holes;
- The minimum diameter of the frame opening (light width) is 600 mm;
- The total size of the gap (a1, a2 = a) between the cover and the frame should be less than or equal 9,0mm;
- The minimum depth of fitting of the cover to the frame (A) should be 50 mm;
- Frame height for cover Class D 400 is a minimum of 100 mm. The size can be reduced to 75 mm if:

- frame is in the concrete bed of minimum C35 / 45 so that there is a connection between the frame and the concrete;
- if the frame has anchorages and, if secured by them

- The contact surface of the frame and cover (surface on which the cover rests on the frame) should be aligned with each other, or performed in a manner that ensures a stable and secure position of the cover;
- Bearing of the frame must be designed so that the pressure on the frame bearing on the test force does not exceed the size of 7.5 N / mm2 and provides stability at the working conditions;
- The surface of the cover is flat. The maximum deviation from the point of leveling is 0.8% compared to the clear width of the cover (A = 600 mm * 0.8% = 4.8 mm);
- The surface of the cover and the frame should be structured. Height of the elevated parts for Class D 400 is 3-8 mm. Elevated surfaces shall not be less than 10% nor more than 70% of the total area of the cover and frame;

The frame and cover should be tested and marked, all in accordance with BAS EN 124: 2002.

An image of the frame and cover is given in the figure below.

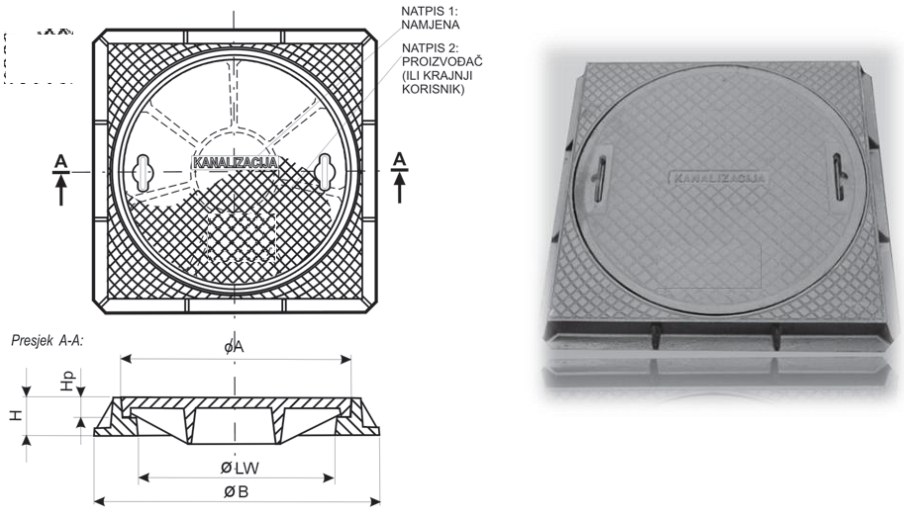

Figure 27: Detail of the frame and cover of an inspection chamber

19.3.4.1. Testing waterproofness

Since waterproofness is one of the basic conditions that the system needs to fulfill, after installation of the pipes it is necessary to test waterproofness of the drainage system. Testing of waterproofness of the internal drainage system must be carried out in accordance with standard BAS EN 1610: 2002. It is important to note that the testing of waterproofing of the

system is carried out directly after installation of pipes, and before making RC coating around the pipe, because all the connections have to be visible, to allow inspection.

19.3.4.2. Technical requirements for the design and construction of the central collector

Overview of the basic technical characteristics for the central collector, and an overview of the relevant standards is shown in the following table and the same must be respected in the design and construction of the system, all in accordance with the applicable regulations and standards.

CENTRAL COLLECTOR		
DESCRIPTION	**CHARACTERISTICS**	**Relevant standards/norms**
Location	The center of the traffic overtaking lane, Lower angle of the pavement structure of the tunnel.	
Dimensions	**COLLECTOR:** Diameter of pipes is determined on the basis of hydraulic calculation. The minimum inner diameter is DN / ID 300 mm; **MANHOLES:** Bright dimensions in the ground plan: 100x100 cm or DN / ID 100cm; The distance between manholes L≤ 60 m ';	
Materials	Materials to be used for the collector:	
	a) Thermoplastic materials (polyvinyl chloride - PVC or polypropylene - PP) with a full wall and a smooth interior, SN≥ 8 kN / m2)	DIN 4262-1 TIP C2 BAS EN 1852-1:2010
	b) Duroplastic materials (reinforced polyester -GRP, SN ≥ 5000)	BAS EN 14364+A1:2009 i ÖNORM B5161
	Manholes in tunnel carriageway must be manufactured from concrete class C30 / 37, XA3 / XD3 [11];	DIN 1045-1 BAS EN 206:2014
	The cover of an inspection chamber should be made of ductile iron, a load class min. D 400 kN, a square frame and circular cross-section	BAS EN 124:2002
	- Inox steps for access to IC	BAS EN 14396:2008
Quality of performed works	- Testing waterproofing of the system. Testing includes waterproofing testing of collectors and manholes with all connecting links;	BAS EN 1610:2002
	- CCTV inspection of completed works; Before the CCTV inspection, it is necessary to make cleaning and flushing of the pipeline pressure min. 150 bar (nozzle pressure).	BAS EN 13508-1:2014 BAS EN 13508-2+A1:2012
Maintenance	- All parts of the system (pipes, manholes) must be regularly maintained and must be available at all times; -Flushing and and cleaning of the system is performed every 3 months; -The quality of pipe material should provide stability at the flushing pressure of at least 150 bar (nozzle pressure). -Cleaning of the drainage system should be carried out with high-pressure equipment with nozzle pressure of min. 150 bar, all in accordance with the instructions for maintaining the system, prepared by the manufacturer of the material.	Instruction on maintaining the system, prepared by the manufacturer and delivered to the end user.

Table 8: Technical requirements for the design and construction of the central collector and overview of the applicable norms.

19.3.5. CCTV inspection of lateral drains and a central collector

CCTV inspection, i.e. recording of collector with robot-camera has to be done after the completion of all works on the central collector, lateral drainage and drainage of leachate. A detailed description of the CCTV inspection is presented under Chapter 19.1.3 of this document ("CCTV inspection of the internal drainage system").

19.3.6. Systems for the treatment of oily water from the tunnel / water protection systems

Outlet from the central collector must be designed so as to provide for the installation of oil and grease separator without a bypass, which has a function to purify smaller amount of waste (oily) water which gets into the system (eg. due to the washing of the tunnel). The degree of purification of waste (oily) water should be designed to fulfill all the conditions and requirements of the current legislation. [17]

In case of an incident, i.e. occurrence of contamination that cannot be properly purified, the total amount of waste water is diverted directly into the tank for receiving accidental spills which is connected with a separator without bypass (Figure 28). Redirection is done with automatic control (automatic valve) in the case of increase of the pollution level.

The reservoir space that is used to receive the relevant amount of accidental spill should be 100% waterproof, and should meet the environmental requirements and regulations.
Sizing of reservoir for receiving accidental spills should be executed assuming the maximum amount of flow in the event of accidental pollution, and therefore, it is necessary to predict the volume of available reservoir space of at least 50 m^3.

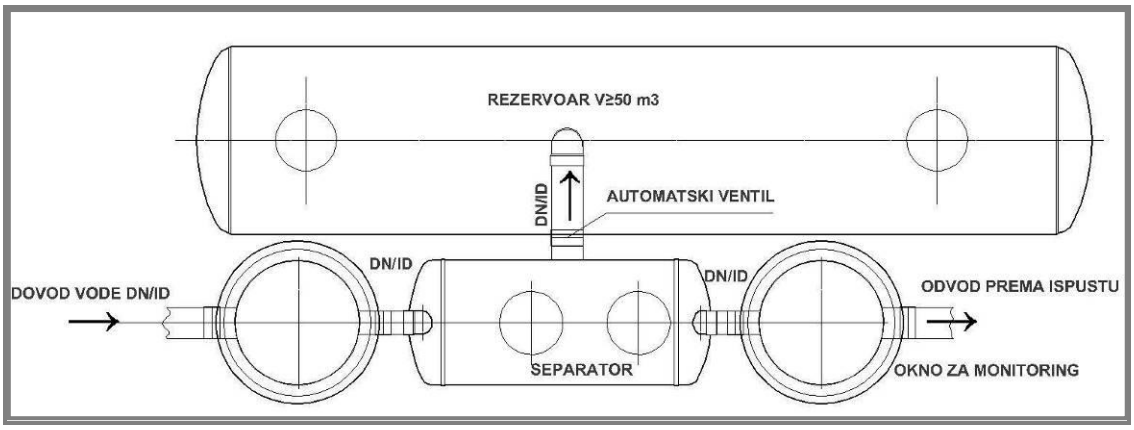

Figure 28: Schematic view of the outlet of the system from a central collector

Review of technical requirements for separators and reservoirs for receiving accidental spill from the motorway route is presented in Table 3 (Chapter 191.5.).

[17] "Regulation on conditions of discharge of waste waters into natural reciepients and public sewage system (Official Gazette of FBiH" 04/12)" currently regulates this area

19.3.7. Fire protection system of the tunnel (hydrant network)

In order to ensure enough water for fire protection in the tunnel, it is necessary to predict the tunnel water supply system and hydrant network within and outside the tunnel. As presented in the chapter "Lateral drainage", for water supply of the tunnel, it is necessary to check the possibility of water supply by collecting groundwater from the tunnel.

If this is not possible or requires large investments, water supply of the tunnel should be provided using the nearest available sources of supply. It should be noted that when selecting solutions, water supply is performed through the shortest possible route to avoid large length of supply pipelines. In tunnels whose length is greater than 500 m ', fire alarm system should have a pipeline under pressure and surface hydrants with reliable water supply along the entire tunnel. Hydrants in the tunnel must be arranged at a distance to 150 m with connections facing the opening of the niche (to the door). The water supply to the hydrant niche must be provided from the main hydrant pipeline having a minimum diameter of DN / ID 100 mm and which is located in the installation channel. Hydrant network inside the tunnel must have ring structure due to safer water supply of fire protection systems and easier maintenance and management of the system.

Hydrants in the tunnel are located in hydrant niches. The equipment set on hydrants in the tunnel must allow fire-fighting class A and B with at least two hydrants, and with two portable fire extinguishers of capacity 9:06 kg (in accordance with JUS Z.C2.035).

In case of class "A" fire (solid substances burning with a flame or ardor) water is used as a spray or fog that is formed by the nozzle. The nozzle should have a relevant flow of 400 l / min (7 l / s) with a range of 30 m in front of the nozzle at the pressure of 6 bar.

For firefighting class "B" (flammable liquids) 3% concentration foam is used. In addition, part of the equipment is valves with Stortz joint for filling firefighting trucks.

Fire hydrant niche should provide the following:
- Firefighting with foam, with simultaneous loading of road tankers;
- Simultaneous fire-fighting with water and foam;
- Firefighting with water with simultaneous loading of road tankers.

Within the niche, in addition to the tunnel hydrants with connectors of different diameters depending on the choice of hydrant type (type A, B and C), additional equipment for fire protection is installed. This equipment includes:
- Branch with valve 2 "- the mixing of foam,
- Fire Hose 3 '(type A, B, x),
- Universal nozzle and nozzle for heavy foam,
- Foam tank and foam mixing equipment,
- Other equipment (universal key "ABC", fittings, lighting fixture with transformer and switch, hand-held fire extinguisher).

In every niche for stopping of the vehicles (lay-by) a hydrant cabinet must be set. It is recommended that the depth of the hydrant niches[18] is about 1.0 m, closed with metal fireproof doors with opening angle of 180 ° and the possibility of stopping in open position.

The figure below provides a detail of the system of fire protection in the hydrant niche:

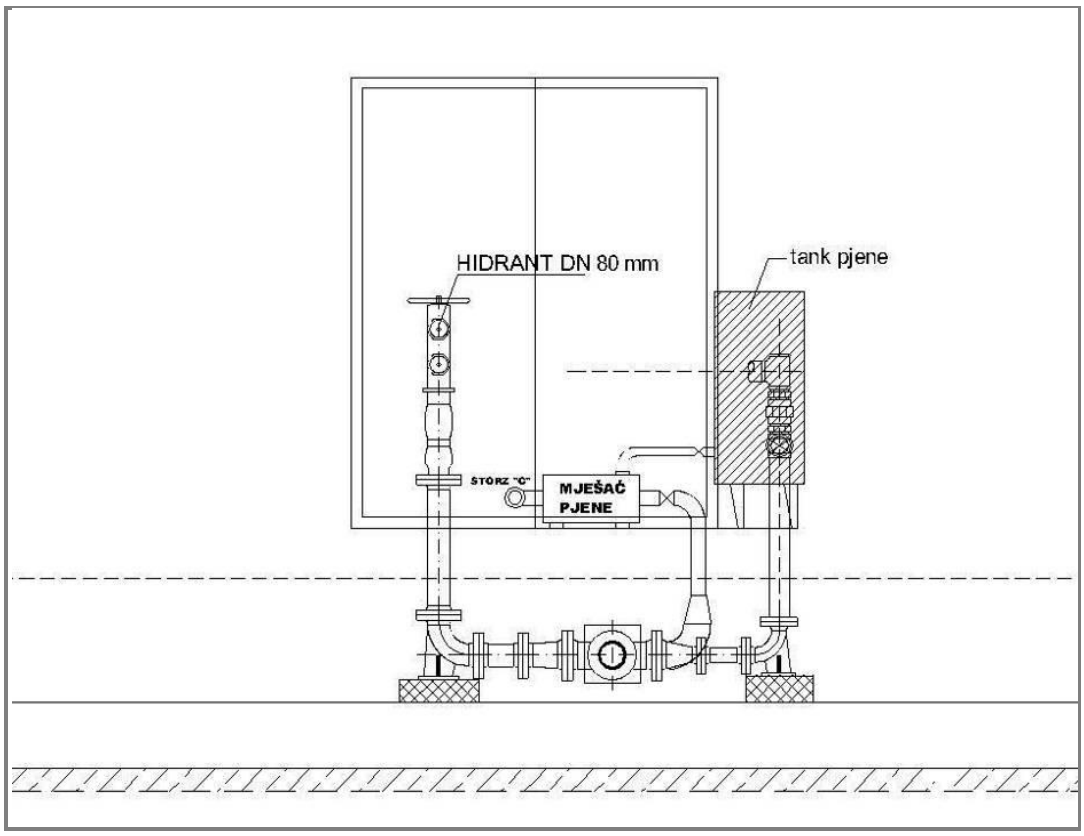

Figure 29: Detail of fire protection system in the hydrant niche

Within hydrant niche, there must be a drainage to prevent water flow from the niche into the installation duct due to any defect of the hydrant or when using a hydrant.
Hydrants outside of the tunnel must be placed right next to the portals of the tunnel (entrance and exit portal) in a way that at least one hydrant is installed at the entrance portal, while the exit portal incorporates one underground and one above-ground hydrant.

Installation site of underground hydrant must be marked conspicuously and in accordance with the requirements and regulations specified in DIN 4066.

The figure below provides a detail of making underground hydrant on the external hydrant network.

[18] In accordance with Austrian guidelines RVS:2009

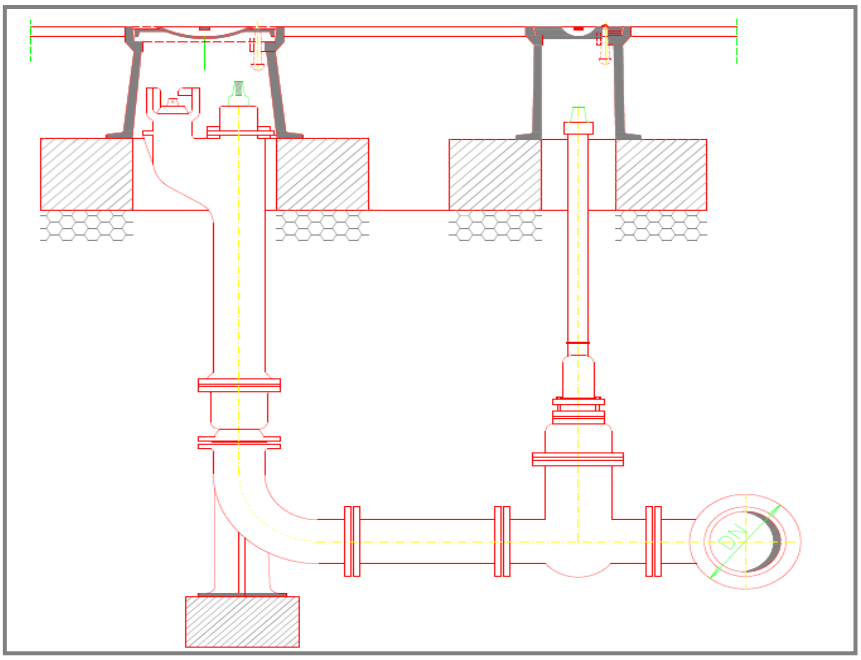

Figure 30: Detail of the underground hydrant

The fittings and reinforcements should be of high quality cast iron. Hydrant network that runs inside the tunnel (in the installation channel) must be protected from freezing. This condition is realized so as to provide in the design the use of pipe material that is thermally pre-insulated at the factory, and as such, is installed at the site.

For tunnels with a total length not exceeding 500 meters', it is necessary to predict the hydrants at the entrance/ exit portals in underground construction.

19.3.7.1. The technical requirements for the design of fire protection systems

Overview of the basic technical characteristics for elements of fire protection systems, and an overview of the relevant standards is shown in the following table and these must be respected in the design and construction of the system, all in accordance with the applicable regulations and standards.

FIRE PROTECTION SYSTEM (HYDRANT NETWORK)		
DESCRIPTION	**CHARACTERISTICS**	**Relevant standards/norms**
Location	External hydrant network: at the entrance and exit portal; Internal hydrant network: Installation channel on the opposite side in relation to the SOS niches.	
Dimensions	**PIPE MATERIAL:** Pipe diameter is determined by calculation. The minimum inner diameter is DN / ID 100 mm and NP 10 bar;	C.J1.030, C.J1.1031, ISO/R 13-55, DIN 28502, DIN 28513 i BAS EN 545:2012.
Material	**PIPE MATERIAL:** -Ductile iron with TYTON joint. External protection: zinc - aluminum minimum 400 g / m2 and epoxy linings> 100µm. Internal protection: cement mortar; **HYDRANTS; FITTINGS AND REINFORCEMENT:** -Ductile iron with a protective epoxy coating; -Materials that are selected must be of good quality and resistant to external influences, and guarantee the sustainability of the structure and purpose of the system in service and maintenance phase.	DIN 28600, ISO 2531; DIN 3476 DIN 28603; DIN 30677-2 BAS EN 545:2012
Quality of performed works	-After completion of work on laying pipelines, it is necessary to perform testing of the system - pressure test; -Before the test pressure, it is necessary to flush the pipeline, -Functionality test of the fire protection system;	EN 805:2000 The relevant valid legislation[19]
Maintenance	-Technical functioning of hydrants must be constantly checked every 6 months; -Early inspections are required as well as regular ones[19] and performed after natural disasters, very low temperatures etc.	Instruction on maintaining the system, prepared by the manufacturer and delivered to the end user.

Table 9: Technical requirements for the design and construction of fire protection systems and overview of the applicable norms

19.3.7.2. Testing of the pipeline for pressure (EN 805:2000)

Hydrostatic testing of pipelines for pressure is performed by standard method given in the European standard EN 805: 2000. For testing, it is necessary to install special X-pieces, which will be removed upon completion of testing.

Pressure test is carried out in 3 stages:

[19] Current applicable regulation: Law on fire protection and fire fighting ("Official Gazette of FBiH", no. 64/09) and Rules on technical norms for external and internal hydrant network for fire fighting ("Official Gazette of FBiH", No. 87/11)

- Phase 1 - preliminary test
- Phase 2 - pressure drop test
- Phase 3 - the main pressure test

The maximum designed pressure (MDP) at the highest point of the pipeline can be read, while STP - System Test Pressure is defined on the basis of the following formulas:

$$STP = MDPa \times 1{,}5 \qquad (19.3.2)$$

or

$$STP = MDPa + 500\,kPa \qquad (0)$$

A smaller value that is obtained by the above formulas is taken. In exceptional cases where the testing is done on shorter sections (sections in length up to 100 m), STP shall be the value of working (operating) system pressure.

<u>Phase 1: Preliminary test</u>

Filling of the pipeline is done from the lowest point, at a rate of 3 l/sec (10,8 m^3/h) with a parallel de-aeration of the pipeline at the highest point, as well as of all connections. All closures on the line by are closed after de-aeration and then pressure is increased up to the value of the STP in a time of 10 minutes. The pressure should be maintained in the pipeline for 30 minutes for a quick method or 24 hours for the standard method.

If there is a decline in pressure to a value greater than 0.50 bar for that time of pressure (30 minutes or 24 hours), it means that the pipeline has leaks or damage. In this case, the test is interrupted and the test should be repeated after the damage is repaired. If pressure drop of less than 0.50 bar is recorded, we proceed to the second phase of the test.

<u>Phase 2: Pressure drop test</u>

Allows assessment of residual air in the pipeline. Upon completion of Phase I of 30 minutes (or 24 hours), where the pressure is maintained at the level of STP, a measurable amount of water is discharged from the pipeline ΔV (cm 3) and pressure drop which thereby arises is measured Δp (bar).

Allowed change to the volume of water in the pipeline ΔVzul (cm^3) is calculated using the following formula:

$$\Delta Vzul = 1{,}5 \times \Delta p \times L \times A \qquad (19.3.3)$$

where
Δp – preassure drop (bar);
L-pipeline length (m');
A – constant pressure, characteristic for the type / diameter of the pipes (cm^3/bar,m);
1,5 – factor to determine the allowed share of air in the pipeline before the main test pressure

If the drained amount of water from the pipeline is less than or equal to the change of volume of water in the pipeline, ie. if it is true that the $\Delta V \leq \Delta Vzul$, it can be considered that the pipeline is properly and sufficiently irradiated.

Phase 3: Main preassure test

Upon completion of the pressure drop test (Phase 2), the pressure on the manometer is monitored for 30 minutes, and if there is no pressure drop, the test is successful. However, if there is a drop in pressure, the test will be extended for another 60 minutes. If during this period of 60 minutes pressure drop is in the value of more than 30% of the STP, the test should be repeated.

On the previously shown method (pressure test) it is possible to screen the quality of the works performed on the hydrant network. However, the functionality of the complete fire protection system shall be made after completion of all work, including the installation of hydrants, all in accordance with applicable laws and regulations regarding the system of fire protection[19].

20. INSTRUCTIONS FOR DESIGN AND PERFORMANCE OF BLASTING WORKS ON MOTORWAY PROJECTS

Introduction

This instruction defines the project documentation (main and detailed design) of excavation with blasting, its contents, legal persons that can create and revise them, measures and procedures related to the execution of blasting works on sections of motorways and expressways, as well as special safety measures during the performance of blasting works. Instruction is intended for designers and auditors of the main and detailed design, contractors and supervisory engineers engaged in construction of motorways and expressways.
Instruction is made in accordance with the following Laws, Regulations and Rules:
1) Mining Law of the Federation of Bosnia and Herzegovina.
2) Regulation on the type, content, marking and storing, control and validation of investment-technical documentation ("Official Gazette of BiH", no. 33/10)
3) Rulebook on technical standards for handling explosives and blasting in mining (O.G. of SFRY no: 26/88 and 63/88)
4) Regulation on technical measures and safety in mining underground works
(OG. 11/67; 35/67; 60/70; 9/71 and 5/73)
5) Law on Occupational Safety (O.G. SRBiH No: 22/90)
6) Ordinance on occupational safety in construction (O.G. 42/68)

In case of possible collisions of the above Acts, Regulations and the Rules, stricter requirements are applicable.

20.1. Project documentation

It is necessary to draw up design of excavation blasting (basic and detailed) for all objects and works on the highway that are performed by blasting:

- tunnel
- cut
- kerf
- foundation and construction pits etc.

Relevant project documentation can be developed and revised by the authorized legal entities, all in accordance with Article 72 and 73 of the Law on mining of Federation of BiH.

20.1.1. Main design of the excavation blasting

As part of the preparation of the Main design of the motorway section, in the case of excavation by blasting, the designer is obliged to prepare the main design of excavation blasting.
The main design of excavation blasting should include:
- Description of the geotechnical properties of the rock mass (description of the geological structure of the terrain, fissure system, etc.) which may affect the selection of explosives and blasting methods,
- Description of works on drilling (general and technical characteristics of the drilling of boreholes)
- The choice of tools and equipment for blasting

- Protective measures

The project is developed and revised by a company authorized for this type of design, all in accordance with Article 72 of the Law on mining of FBiH.

The main blasting design is an integral part of investment and technical documentation to which the Federal ministry of physical planning (in accordance with Article 46 of the Decree on type, content, marking and storing, control and validation of investment-technical documentation) gives approval for construction.

20.1.2. Detailed design of excavation blasting

Before starting work on the excavation blasting, the contractor is required to provide the revised detailed design of excavation blasting, all in accordance with Article 48 and 70 of the Decree on type, content, marking and storing, control and validation of investment and technical documentation as well as in accordance with the Law on Mining of Federation of Bosnia and Herzegovina.

Detailed design of excavation blasting should include:
- Geotechnical characteristics of rock masses confirmed in the mission of the G31, and the categorization of rock masses necessary for scaling of the blasting.
- Description of works on drilling (detailed specifications for drilling of boreholes, stride length of drilling etc.).
- The choice of tools and equipment for blasting (explosives, initiation means, blasting machines, equipment, etc.)
- Work on blasting, as follows:
    - Calculation of blasting parameters.
    - The basic parameters for determining blasting scheme.
    - Elements of blasting profile.
    - Filling boreholes, connection and control of minefield.
    - The blasting technology
    - blasting schemes
- Occupational safety measures

The design shall be developed and revised by a company authorized for this type of design, all in accordance with Article 72 of the Law on Mining of FBiH.
Any amendment during the work must first be approved by an authorized auditor for blasting works, and then by supervising engineer.

Blast holes are typically made by deep drills equipped and adapted to this kind of work. Previous geotechnical tests shall be physical and mechanical properties of rock masses and the direction of the layers and fall in relation to the axis of the embankment, on the basis of which technologies will be selected, ie, the method of excavation determined, as well as drilling method, borehole spacing and filling quantity of explosives.
Schedule of the blast holes as well as the quantity of explosives at the mine borehole should be such as to ensure the formation of granulation of demined materials and the need for subsequent grinding of the stone pieces to be minimal.

Design of excavation blasting must be made so that the blasting operations cause minimal damage to the rock mass in slope, that the excavation work does not threaten the stability of the excavation at any stage of work and to ensure that during works in the excavation the impacts that would have caused disruption of traffic, people and the environment are minimized.

20.2. Conduct of works

Blasting works can be conducted by a company that fulfills the requirements of Article 16 of the Law on Mining of FBiH. The contractor must comply with technical regulations and norms in the mining industry, the regulations on occupational safety, environmental protection requirements set forth in the land use permit and other regulations, to provide personal protective equipment to employees and implement legislation on the protection of people and property.

Works on the excavation blasting must be carried out in accordance with:
1) The main design of excavation blasting
2) Detailed design of excavation blasting
3) Law on Mining of Federation of BiH
4) Regulations on technical standards for handling explosives and blasting in mining. (O.G.. SFRY no: 26/88 and 63/88)
5) Regulations on technical measures and occupational safety in mining underground works (OG. 11/67; 35/67; 60/70; 9/71 and 5/73)

When working on the blasting, the contractor must have experienced and qualified workforce for this kind of work.

At every use , explosives shall be handled in accordance with the approved detailed design for blasting, applicable laws and regulations for such works for the safety of the construction site, equipment, facilities, people and the environment.

Total blasting operations include:
- Preparatory work,
- Major blasting works
- Drilling and primary blasting,
- If necessary, subsequent finishing of the profile and subsequent blasting.

In blasting, as well as in other works in excavation, negative effects should be minimized such as seismic effects, noise, dust and the explosion discarded fragments of the rock mass that could cause interference to traffic, people and the environment. If it comes to such interference, Contractor shall immediately remove it at his own expense. Because of the negative effects caused by blasting, it is necessary before starting work at full capacity to implement a trial blasting at lower rates used to examine the intensity of the negative effects of the assumptions given in blasting design.
Test blasting is carried out by the contractor with the approval of the supervisory team. The result of test blasting is entered in the initial report of blasting and verified by the control. Only after confirmation of theoretically derived parameters, blasting at full capacity can commence.

During construction, it is necessary to set up all the necessary traffic and safety signaling.

For better development of the slope, it is mandatory to perform "smooth blasting" before the other mines in the trench profile. Thus the slopes in the final landscaping are arranged more easily, the have more regular surface, and the amount of loose material that should be cleaned from the slope is minimum. This prevents loosening of the rock mass in the slopes, which become more stable and easier to maintain.

If separation of rock mass is done at the designed surface of the slope to the vertical alignment from the rest of the mass of the excavation core, digging of excavation profile is reduced to a minimum. This effect depends on the strength of the rock mass, and providing the layers stretch and fall toward axis of the embankment as well as the type of lamination and cracking of the rock mass.

The material is excavated to the designed gradient of the slope with a mandatory removal of crumbly and loose parts of the walls up to the level of the bed, after which site traffic may take place.

If the excavated material is to be used for the production of granular stone material for making wedges for the structures, as the final layer – embankment crown, supporting layers of road construction of access roads and ramps, concrete aggregate and asphalt layers, it is necessary by the competent authority to obtain evidence regarding the usability based on the results of laboratory tests.

If on the basis of preliminary testing of the competent authority proof of usability of stone material is received, adequate work technology should be provided and attention should be paid to exclude mixing clay with rock material that has been tested. For the use of such materials the consent of the supervisory engineer is required.

20.2.1. Professional staff

Only confidential and professionally qualified persons designated by the Technical manager of the site can work with explosives:
- Shot Firer
- Assistant Shot Firer
- Persons responsible for the storage of explosives

The persons responsible for working with explosive agents must be professionally qualified to carry out such activities. The contractor must have a record of all persons on site who work with explosives. The records shall contain personal data, information on qualifications, the exams passed, medical check-up (renewed every year) and for the shot firers older than 55 years at least twice a year, a certificate of testing, records of violations and penalties. Every year, it is required to perform restoration of knowledge of responsible persons and do tests with records kept. Persons who do not pass the restoration and assessment test can not be allowed to work with explosives.

Responsibility for the implementation of this procedure is on the main contractor who appoints the project manager. Supervision is required to inspect the implementation of the above procedures and the compliance with laws and bylaws.

20.2.2. Blasting

Before the start of blasting, it is necessary to ensure the procurement, delivery and storage of explosives and initiating agents. Project manager of the Contractor is responsible for the safety of transport and storage.

The preparation also involves providing information to the public by the Contractor, and especially factors that will feel the effects of blasting. Project manager of the Contractor is responsible for passing information to the public.

It is essential before and after blasting to perform a detailed review and determine the condition of all structures in the area of the potential impact of blasting. Review is performed by a joint Supervisory team and the representative of the Contractor (project manager) .After the examination, photo documentation and a record are made.

Blasting in tunnel is used as a tool for cutting the rock mass, and not for its complete destruction. Although blasting has to be effective, the greatest attention must be paid to minimum possible destruction of the surrounding rock in the walls of the excavation, and achieving as precisely as possible the contours of the excavation. Attempts should be made to minimize over-profile excavations in the tunnel, but also un-demined part that is later required to remove.

Blasting procedure

After the completion of transferring explosive means to the location of works, securing of blasting site starts. All persons who do not participate in the phase of blasting are removed from the blasting site, and physical security is placed at the entrance to the blasting zone, preventing other persons access to the site.

In addition to the physical person, a board with a warning,, STOP BLASTING " is placed. Shot firer before the start of filling the blast holes, must be informed about amount of explosives for each borehole, as well as the scheme of tying the minefield. Shot firer is required to prepare the cartridges according to the scheme of mining.

In the case of certain discrepancies during drilling, which can be caused by geological or other unforeseen circumstances, Shot Firer can change the scheme of blasting to a given situation. The new scheme is approved by blasting technical manager and supervising engineer.

Shot firer prepares and places in the prepared holes impact cartridges, and then the assistants fill the borehole with explosives. Filling can be done only by placing individual cartridges in the borehole, and blasting it with a mining stick of wood. After filling, the holes are closed with clay cap or some other inert material. Tying of the mines can be done only by shot firer. When binding, it is necessary to pay attention to make good contact between the wires of the lighter. After binding, it is necessary to measure resistance and in case of any

deviations from the calculated resistance, as soon as possible to find the cause and eliminate it.
If it is determined that everything was fine, lighter wires are connected to the electrical cable, through which the minefield binds to a machine for detonating mines.

Before starting, it is necessary to check whether all the workers left the place of blasting and warn all workers at the site on blasting, so they could be able to take shelter in a safe place.

Shot firer is also obliged to detonate mines from the safe place, so as not to endanger himself and the firing equipment. Last check of resistance of lighter and cable is done immediately before connecting wires to the firing machine in order to subsequently carry out the blasting.

After mine firing and ventilation of the work site, firer is required to check the state of the mining. Special attention should be given to the possibly unexploded mines and take all the measures for the destruction of the mines according to the manufacturer's instructions. When the mine firer is ensured that the situation on the place of mining, after blasting, is safe for further work, he uses a sound signal to inform all present at the site about it. After reviewing the site shot firer is required to handover a work site to manager of construction site and in writing on pre-defined and adopted form.

Shot firer is bound to return from the place of blasting all unused explosive materials back to PS (handy storage). All data on the amounts of explosives used must be kept accurately and must be identical to the data on the state of the stock in the warehouse. In case the shot firer serves as warehouse manager, he must keep records about the state of stocks in the warehouse. The responsibility for the implementation of this procedure is on the shot firer. Technical manager of the site is responsible for supervision of the shot firer.

Technical Site Manager is responsible to, in a given time interval, check the inventory in the warehouse and confirm the correctness of the stock with his signature in the book of received explosives.
Supervision is required to inspect the implementation of the mentioned procedures.

Transport of explosives

Transport of explosives via public road to the site may only be done with appropriate vehicle that meets the requirements per ADR. Person transporting explosive materials through the public road to the site must also meet the requirements set by ADR, as well as a co-driver.
Transport of explosives to the site is possible only with the acquisition of a special transport permit issued by the competent police service of the Ministry of Interior at the request of a legal entity dealing with transport. Transport of explosives is organized by the Contractor.

Receiving explosives

Technical Manager of the Blasting Site is an engineer who heads the blasting operations and who is designated for that purpose by the responsible person in the legal entity responsible for carrying out blasting (contractor or subcontractor for blasting).

Receiving explosives is carried by a person authorized by Technical manager of the blasting site - Chief Shot Firer - who is also a handy storage operator (hereinafter operator of PS), based on the requisition signed by the technical manager of the blasting site. In this work he can be assisted by another person who is qualified for this work, which must be authorized by the Technical manager of the blasting site. Chief Shot Firer keeps the book of received explosives containing all relevant information on the type and amount of explosives. The book of received explosives is filed in construction documentation.

Unloading of explosives from the vehicle and loading them into PS is done manually. When receiving explosives, within 20 m, there must be no other person other than the operator of the PS, his assistant and the vehicle crew. The operator shall immediately enter into the book of received explosives, the amount received and type of explosive materials. When all explosives are accommodated in the PS, the operator is required to lock the PS with patent padlock. Control of handy storage and books of received explosives is performed by Technical manager of the site.

Supervision is required to inspect the implementation of the above procedures and the compliance with laws and bylaws.

Storage and transport of explosive materials

For temporary storage of the necessary quantities of explosive materials Contractor shall use the auxiliary storage on site. The whole area of the warehouse will be secured by a fence. The warehouse should be located in the safest place of work site. The extra storage is possible to stockpile up to 500 kg of explosives and 1,000 detonators. All explosive materials must be stored in the original packaging.

Explosive materials located in PS are received in the following way:
- Responsible operator of the PS in the shift receives the necessary amount of explosive materials
- Received amount is recorded, entered in the book of received explosive materials
- Shot Firer receives explosives and records received quantities in blasting booklet.

When transferring explosives from PS to the place of use on the site, vehicles must not move on the route and all the other machines must be turned off. Transportation of explosive materials from PS to usage site is carried out separately for explosives and separately for lighters. Explosive ordnances from PS to places of use are transported -transmitted manually and in original packaging. Lighters can be carried only by one shot firer separately from explosives.

Shot firer is responsible for the implementation of the said procedure. Control of the storage and transfer of explosives is carried out by Technical manager of the site.
Supervision is required to inspect the implementation of the above procedures and the compliance with laws and bylaws.

Records

Shot Firer must keep the miner booklet (daily card), which keeps track of the amount of use, the used quantity of explosive ordnances. Any amount used must be confirmed by the Technical manager of the site or its assistant, who is required to confirm the use of these amounts of explosives after each blasting.

20.3. Special security measures during execution of blasting works

20.3.1. Security measures with unexploded mines

If the shot firer during his inspection determines that there are unexploded mines, he shall record the number and position of unexploded mines and take measures for the destruction of unexploded mines according to instructions by the manufacturer. After identifying unexploded mines and its marking, inert material from the hole needs to be carefully removed in order to determine the direction of the hole. At a distance of 8 diameters of the hole of unexploded mines, drilling of new holes is done, in parallel with drilling of unexploded mines. New holes are filled with explosives and blasting is performed according to the mining procedure. Filling of explosives, securing and review is done as with initial blasting. The responsibility for the implementation of this procedure is on the shot firer.

Technical manager of the site is responsible for control of Shot Firer. Supervision is required to inspect the implementation of the mentioned procedures.

20.3.2. Security measures of the seismic effect of blasting

Quakes caused by blasting are directly relevant to the amount of explosives that is initiated. The strength of the quake affected by other factors, such as soil type, distance from the place of blasting, water saturation, a way of opening the minefield and more. Since these factors are constant, Contractor may only impact the factor of the explosive charge blast hole, the amount of explosives in the millisecond interval.

Another important figure is the limit allowed for the quake, which is caused by blasting. Since domestic norms have not been adopted, foreign norms must be applied. It is recommended to apply Austrian ÖNORM S 9020 and the German DIN 4150. ONORM S 9020 contains information for rational development of optimally adapted evaluation of quakes caused by blasting at 4 degrees. It is also important to carry out seismic surveys on closer structures. The implementation of this process is controlled by the supervision with monitoring entry in the construction diary.

20.3.3. Safety measures against scattering of waste material

Usually at the beginning of construction of a tunnel and initial mining there is a possibility of scattering of mined material. Excessive scattering of demined material must be reduced by technical corrections as follows:

- Optimization of the mine filling of the holes ie. optimal specific consumption of explosives.
- Optimal concentration of explosives in the holes
- Sufficient discharge and sufficient length of clay charge - cap.
- Covering the minefield or closing the entrance with felt.

Security scattering radius is approximately 100 m.

20.3.4. Security regarding the occurrence of the shock wave

Every mining causes immediate changes in air pressure in the environment. This phenomenon is resulted as a shock wave. Before initiating a minefield it is necessary to remove all the employees of the affected areas of the zone, which is defined on the basis of test mining and measurements of air strikes. Shot Firer is responsible to carry out this process, and affected zone shall be determined by technical manager of the blasting site.

20.3.5. Security against the toxic, suffocating and heat effects of the blasting

When blasting in the tunnel, danger of toxic and suffocating effects is always present. Due to the high risk of the toxic and suffocating effects, after each blasting it is necessary to wait a while (about 20 minutes), for the dust to settle, the gases incurred by blasting to be diluted through ventilation and that the worksite is ventilated.

It is important to measure concentrations of hazardous gases, and only after that do an inspection of the site after blasting. All measurements of concentration of dangerous gases should be carried out in the proper intervals.

The manager of the shift and shot firer are required to control the ventilation of the site as follows:
a) Shot firer

- At the beginning of the shift
- During shifts, before the start of drilling minefields, before and after the filling of mine holes before and after blasting at the site from where the blasting is done
- At the end of the shift

b) shift manager

- For each visit, coming to and leaving the site
- During each tiny disturbances in ventilation and whenever the opportunity arises

Shot Firer and shift managers are required to the enter results of the gas situation control in the tunnel into the appropriate records.

20.3.6. Security against the occurrence of methane (CH_4)

Methane is a colorless gas, a compound of carbon and hydrogen with the chemical formula CH_4. Basic ingredient is natural gas. Methane is lighter than air and occurs in the overlying parts of the tunnel, where it should be measured according to the rules. It often occurs in

coal deposits, and sometimes there is pressure in the rock mass in the form of,, pockets ". When crossing the pockets, there is a discharge of methane in the form of blower, wherein the concentration of methane in air rapidly increases, typically above MNK (minimum allowed limit).

Methane burns with bright bluish flame and its combustion creates carbon dioxide and water. It is not soluble in water and in mix with air in the range from 5 to 15% is highly explosive, maximum explosive effect is at a concentration of 9.5%. Explosive mixture of methane and air can be ignited by sparks or open flames.

In the case of methane greater than 0.5% the procedure is following:
- Stop all works at the head of the site (where methane appeared)
- Shut down operation of all machines on the site
- Pull workers out of a tunnel or contaminated sites
- Turn off the power supply of electricity (on the switch outside the tunnel)
- Control the fans
- Prohibit the entry to the tunnel or access to the contaminated site until the arrival of the inspection bodies.

In addition to the above described procedure, the Contractor is obliged to comply with the applicable legal regulations and bylaws in the area of occupational safety as listed below:
1) Law on Occupational Safety (O.G. SRBiH No: 22/90)
2) Ordinance on occupational safety in construction (O.G. 42/68)
3) Rulebook on technical standards for handling explosives and blasting in mining. (O.G. SFRY no: 26/88 and 63/88)
4) Regulation on technical measures and occupational safety in mining underground works (O.G. 11/67; 35/67; 60/70; 9/71 and 5/73)
5) FIDIC 6.7 Health and Safety

Director
mr.sci. Ensad Karić

Number: 01-3559-8/14
Date: 11.06.2014.

Unified and revised edition of the Set of Instructions

(End of translation)

I hereby certify that this is a faithful and complete translation of the original document written in Bosnian language.

Date: 15th July 2015

Number: 21/15

Certified Court Interpreter for English Language

Mirsada Pehilj